Appendix B-1

Standard Construction Drawings

Table of Contents

TYPICAL STREET SECTIONS

110.01	Local Street with Shoulders
110.02	Local Street with Curb and Gutter
110.03	Collector Street with Shoulders
110.04	Collector Street with Curb and Gutter
110.05	Arterial Street with Shoulders
110.06	Arterial Street with Curb and Gutter
110.08	Typical cul-de-sac - Local Street with Shoulders
110.09	Typical cul-de-sac - Local Street with Curb and Gutter
110.11	Typical offset cul-de-sac – Local Patching
120.01	Patching Paved Streets

CONCRETE PAVEMENTS

200.01A	Joint Details
200.01B	Joint Details
210.01	Residential Street
220.01	Collector Street

DRIVEWAYS – SIDEWALKS – RAMPS

Miscellaneous	400.01	Curb Details – Sidewalk Ramp
	400.02	Curb Details – Residential Driveways
	400.03	Curb Details – Commercial Driveway
Driveways	410.01A	Driveway Locations with Curb and Gutter

Standard Construction Drawings (Continued)

	410.01B	Driveway Locations without Curb and Gutter
Sight Distance	410.01C	Sight Distance Diagram
	410.02	Driveway – Residential with Curbs
	410.03	Driveway – Commercial with Curbs
	410.04	Driveway - Non-curb and Gutter
	410.05	Alternate Expansion Joint for Driveways on PCC Streets
Sidewalks	420.01	Sidewalk
	420.02	Sidewalk at Back of Curb
	420.03	Sidewalk Reinforcement at Drainage Structure
Ramps – Sidewalks With Grass Parkway	430.01	Sidewalk Ramp – Type A
	430.02	Sidewalk Ramp – Type B
	430.03	Sidewalk Ramp – Type C
	431.01	Mid-block Sidewalk Ramp
Ramps – Sidewalks At Back of Curb	432.01	Sidewalk Ramp – Type A
	432.02	Sidewalk Ramp – Type B
	432.03	Sidewalk Ramp – Type C
	433.01	Mid-block Sidewalk Ramp
Ramps – General	435.01	Detectable Warnings
Patching	440.01	Patching Driveways and Sidewalks

STORM DRAINAGE

Miscellaneous	500.01	Drainage Structure Steps
	500.02	Drainage Structure Invert
	500.03	Inlet Opening Trash Rack
	500.04	Drainage Structure Weep Holes
Curb Inlets	505.01A	Type M Inlet – Plan and Sections
	505.01B	Type M Inlet – Notes

Standard Construction Drawings (Continued)

	505.01C	Type M Inlet – Section and Detail
	505.01D	Type M Inlet – Setting Diagram
	505.01E	Type M Inlet – Deflector Detail
	505.01F	Type M Inlet – Edge Angle Assembly
	505.02	Type A Inlet
Junction Boxes and	510.01	Junction Box
Area Inlets	510.02	Side Opening Inlet
	510.03	Catch Basin
Outfalls	525.01	Toewall and End Section
	525.02	Rock Lining for Culvert Outfalls
	525.03	CMP – Mitered End Detail
Swales	530.01	Concrete Swale – V Type
	530.02	Concrete Swale – Flat Bottom Type
	530.03	Rip Rap with Filter Fabric
Signs	540.00	Street Signs and Posts

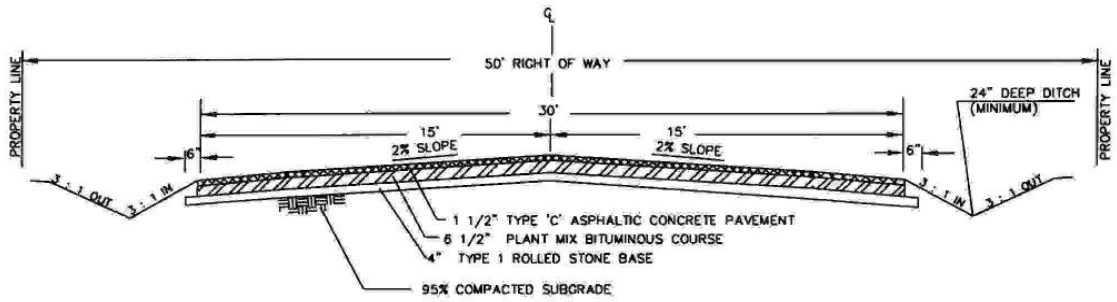

ASPHALT PAVEMENT WITH SHOULDERS

NTS

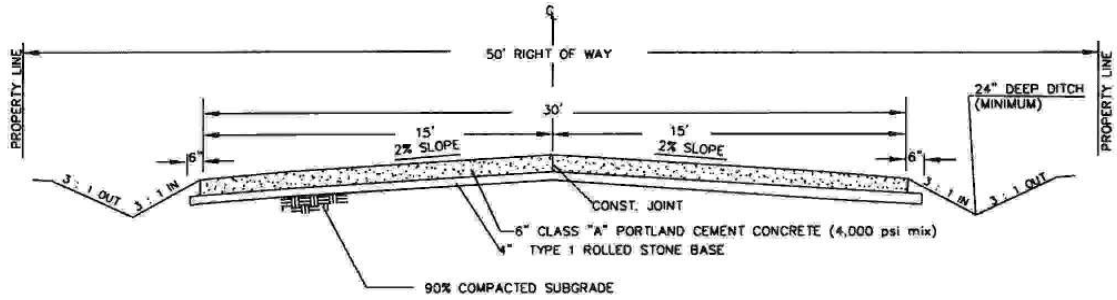

CONCRETE PAVEMENT WITH SHOULDERS

NTS

DWM Approved	02/19/02 Date	COUNTY OF BOONE MISSOURI PUBLIC WORKS	LOCAL ROAD WITH SHOULDERS TYPICAL CROSS SECTIONS	110.01
Revisions				

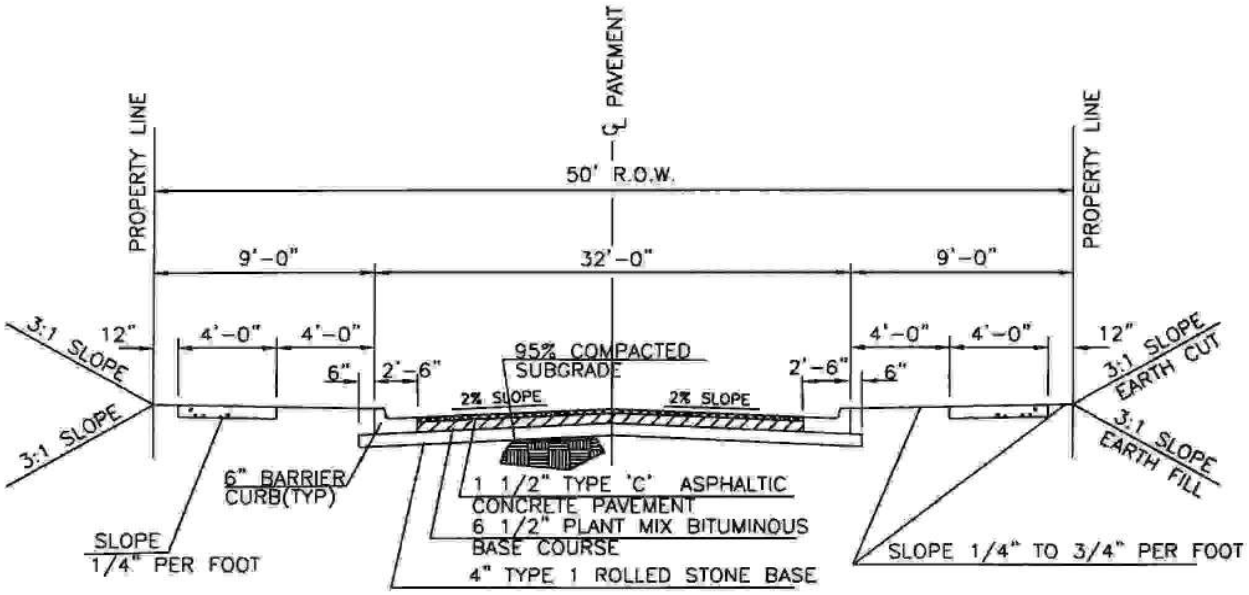

32 FT. ASPHALT PAVEMENT
(Standard)

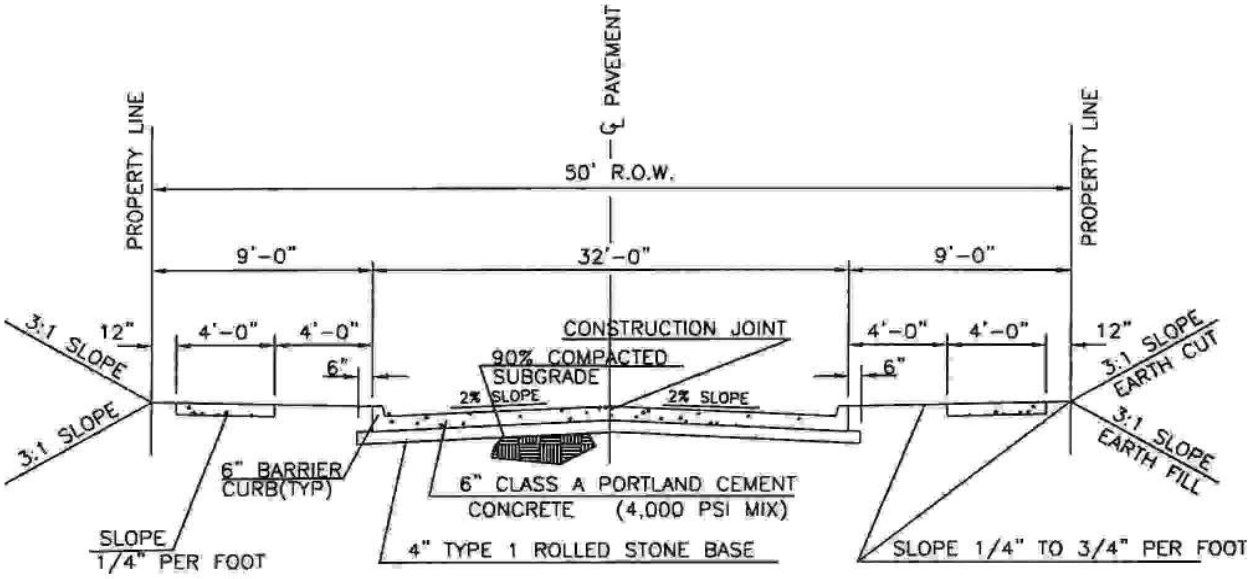

32 FT. P.C.C. PAVEMENT
(Standard)

DWM Approved	02/19/02 Date	COUNTY OF BOONE MISSOURI PUBLIC WORKS	LOCAL ROAD WITH CURB AND GUTTER TYPICAL CROSS SECTIONS	110.02
Revisions				

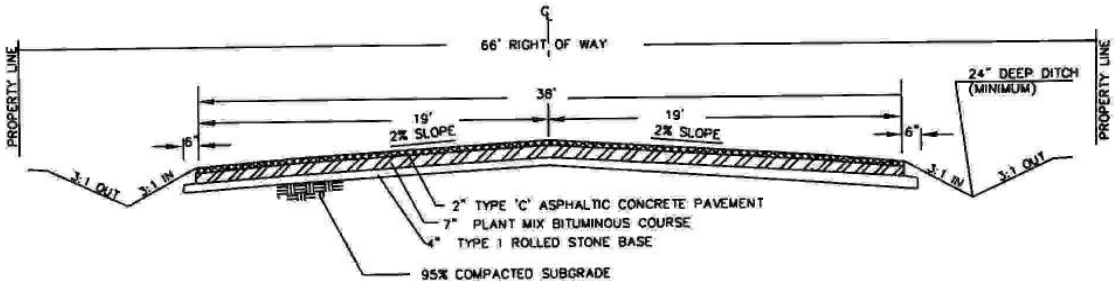

ASPHALT PAVEMENT WITH SHOULDERS

NTS

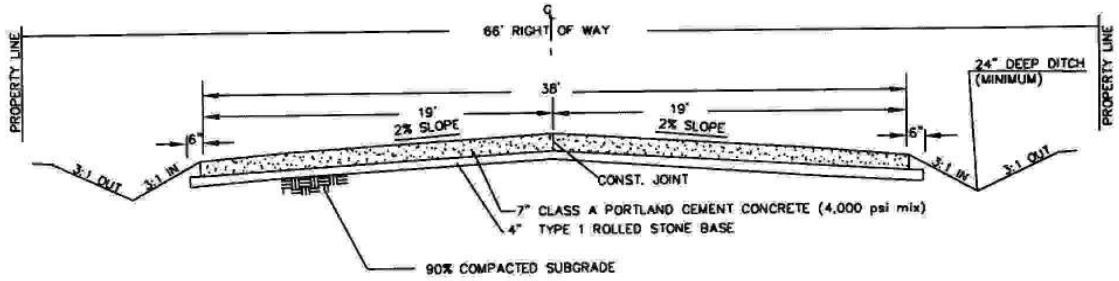

CONCRETE PAVEMENT WITH SHOULDERS

NTS

Approved 02/19/02 Date Revisions	COUNTY OF BOONE MISSOURI PUBLIC WORKS	COLLECTOR ROAD WITH SHOULDERS TYPICAL CROSS SECTIONS	110.03

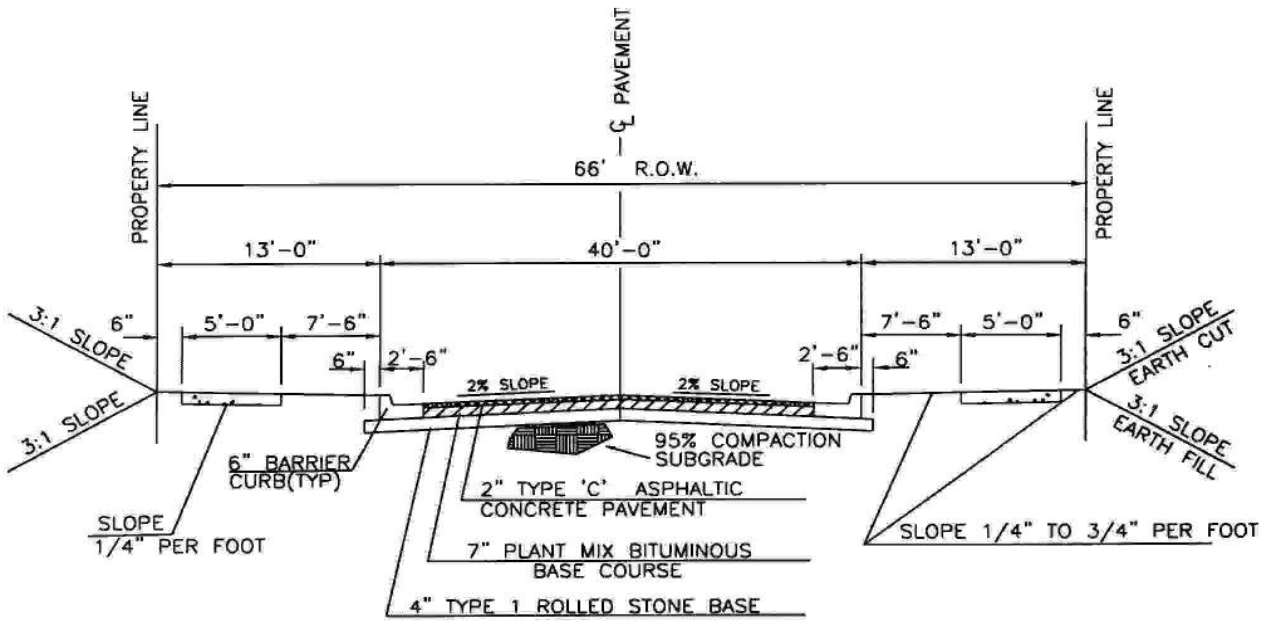

40 FT. ASPHALT PAVEMENT
(Standard)

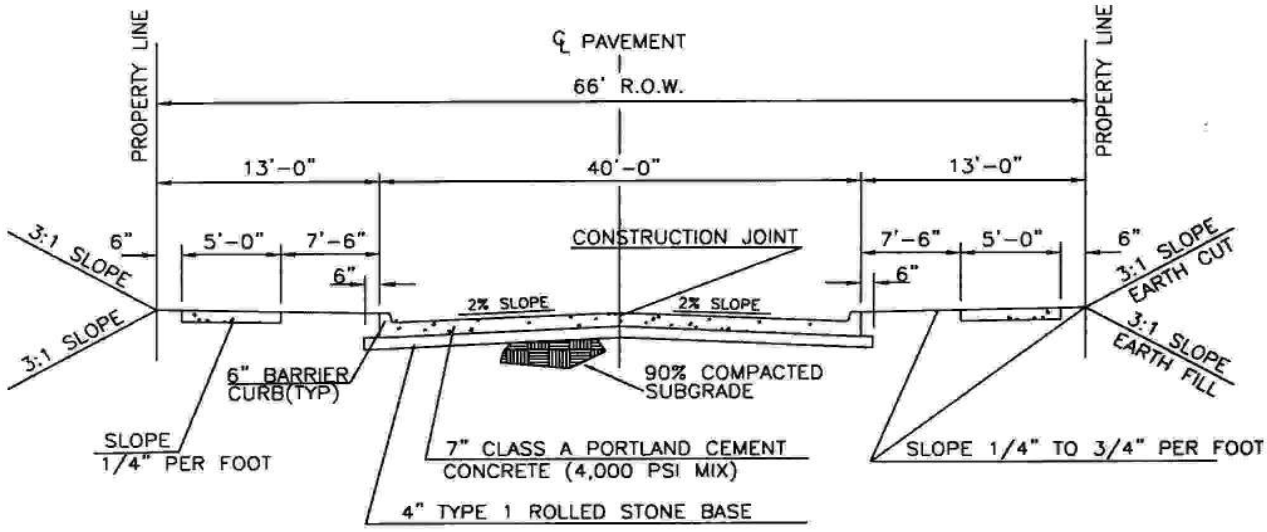

40 FT. P.C.C. PAVEMENT
(Standard)

DWM Approved 02/19/02 Date Revisions	COUNTY OF BOONE MISSOURI PUBLIC WORKS	**COLLECTOR ROAD WITH CURB AND GUTTER TYPICAL CROSS SECTIONS**	**110.04**

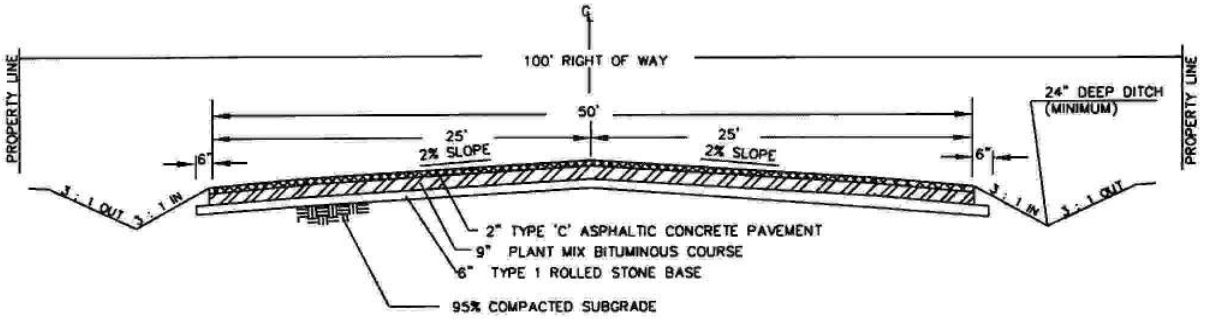

ASPHALT PAVEMENT WITH SHOULDERS

NTS

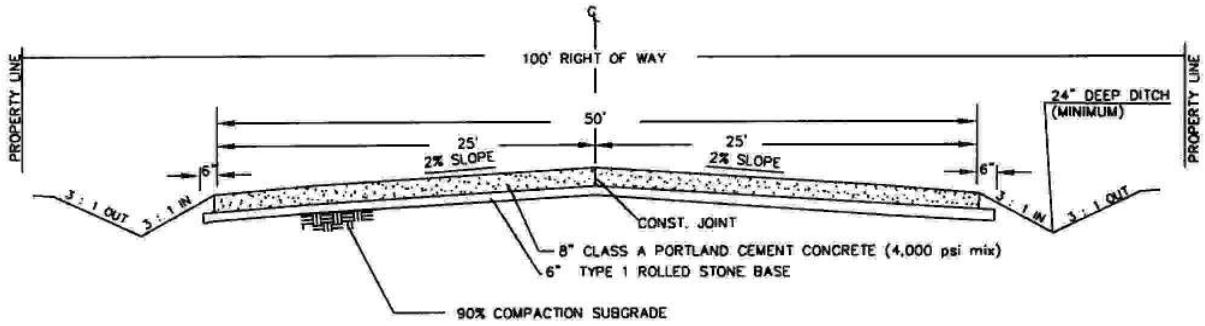

CONCRETE PAVEMENT WITH SHOULDERS

NTS

Approved 02/19/02 Date	COUNTY OF BOONE MISSOURI PUBLIC WORKS	ARTERIAL ROAD WITH SHOULDERS TYPICAL CROSS SECTIONS	110.05
Revisions			

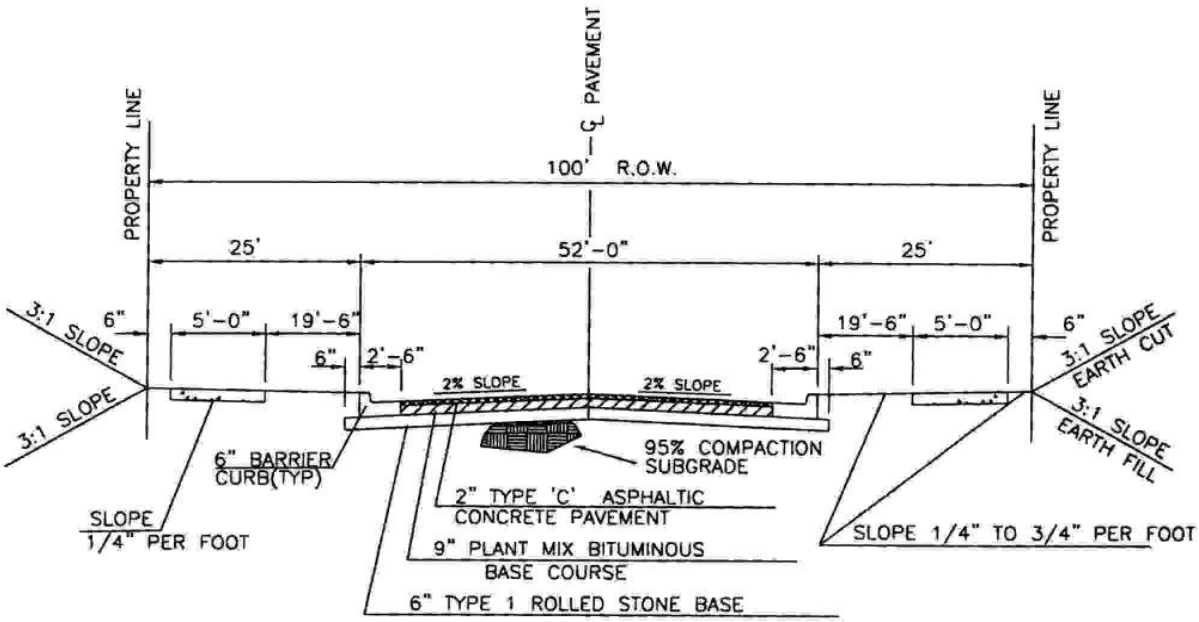

50 FT. ASPHALT PAVEMENT
(Standard)

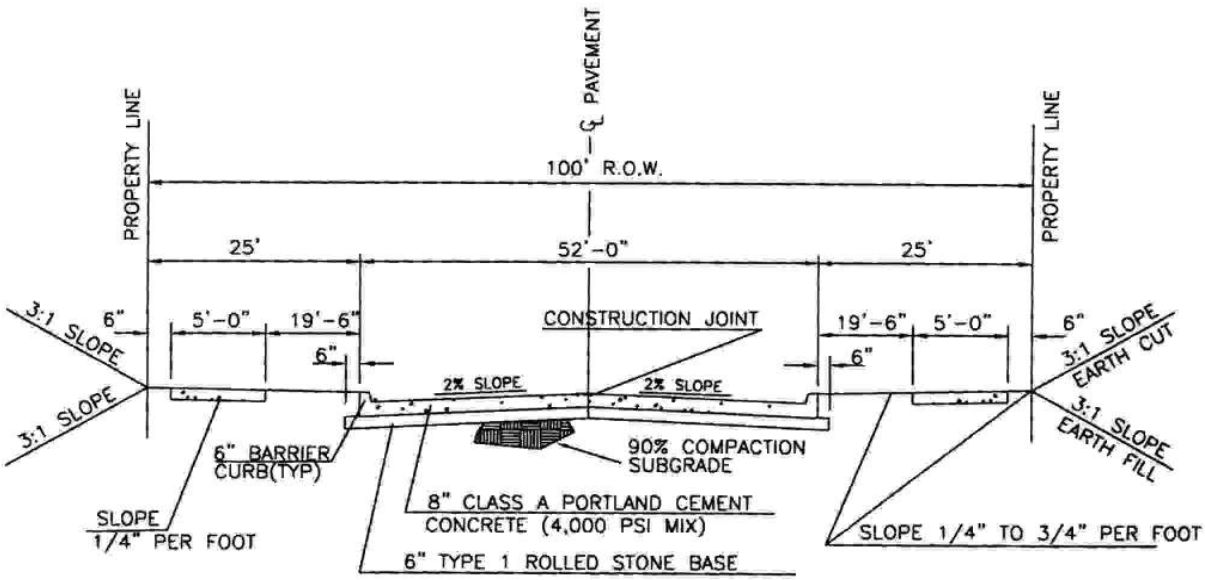

50 FT. P.C.C. PAVEMENT
(Standard)

Approved 02/19/02 Date Revisions	COUNTY OF BOONE MISSOURI PUBLIC WORKS	**ARTERIAL ROAD WITH CURB AND GUTTER TYPICAL CROSS SECTIONS**	**110.06**

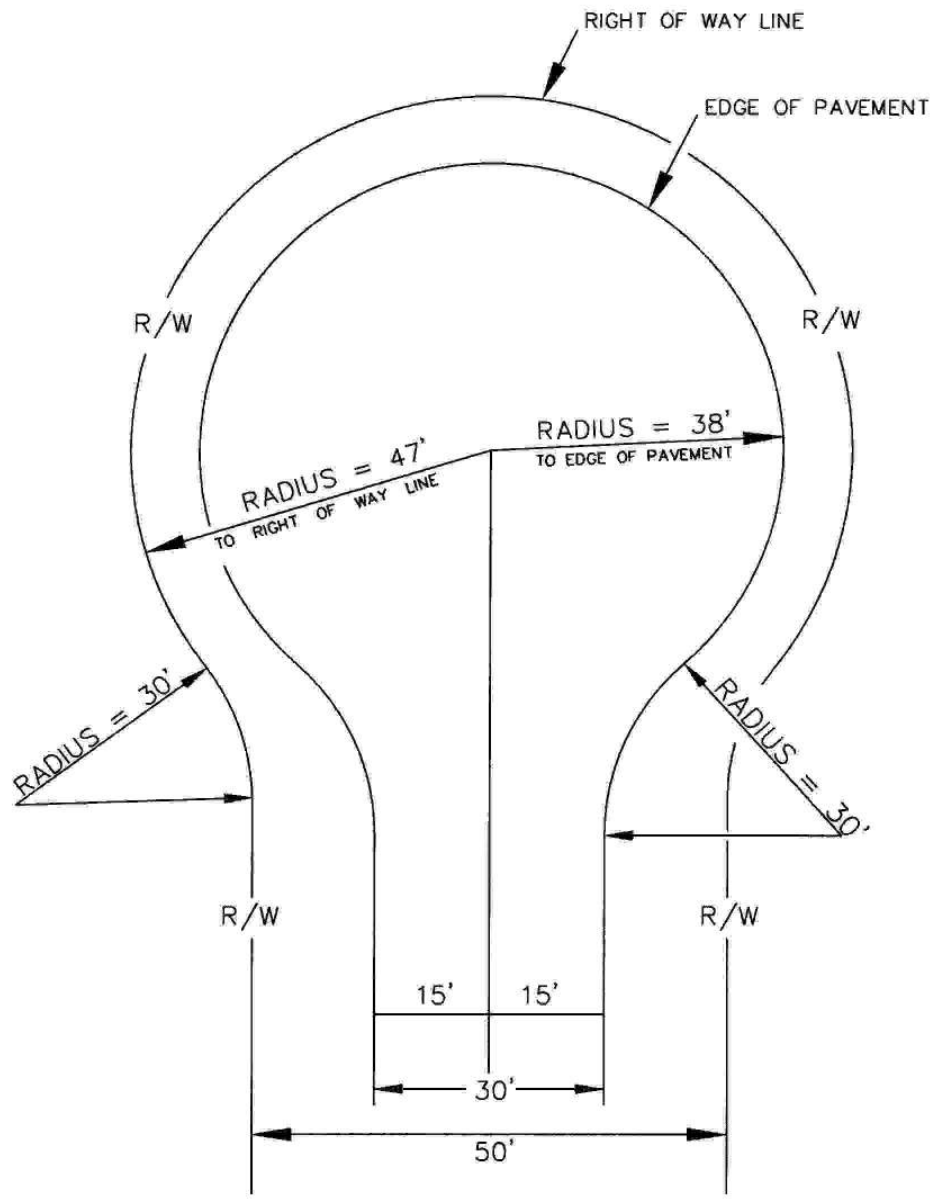

DWM Approved 02/19/02 Date	COUNTY OF BOONE MISSOURI PUBLIC WORKS	LOCAL ROAD WITH SHOULDERS TYPICAL CUL-DE-SAC	110.08
Revisions			

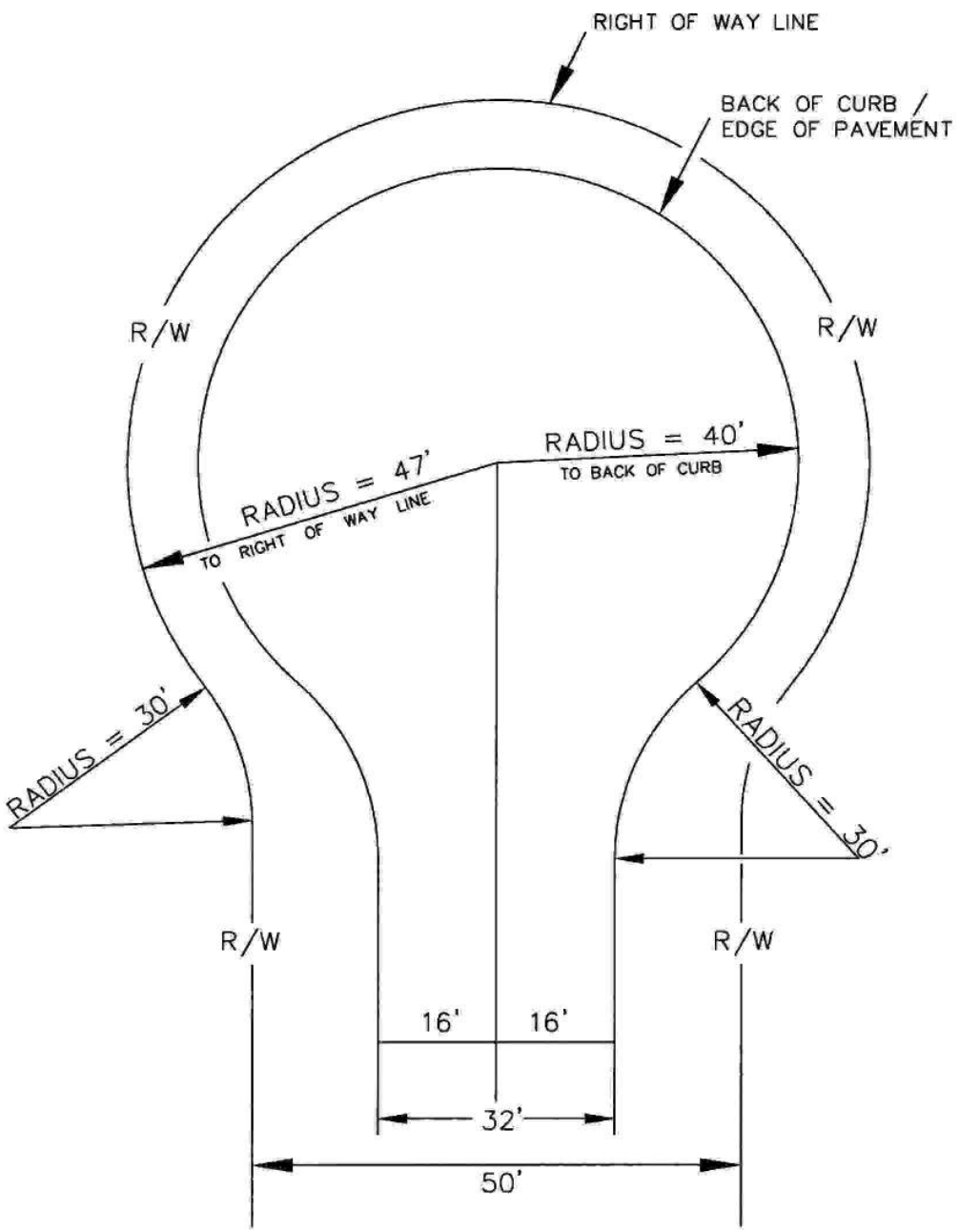

DWM 02/19/02 Approved Date	COUNTY OF BOONE MISSOURI PUBLIC WORKS	LOCAL ROAD WITH CURB AND GUTTER TYPICAL CUL-DE-SAC	110.09
Revisions			

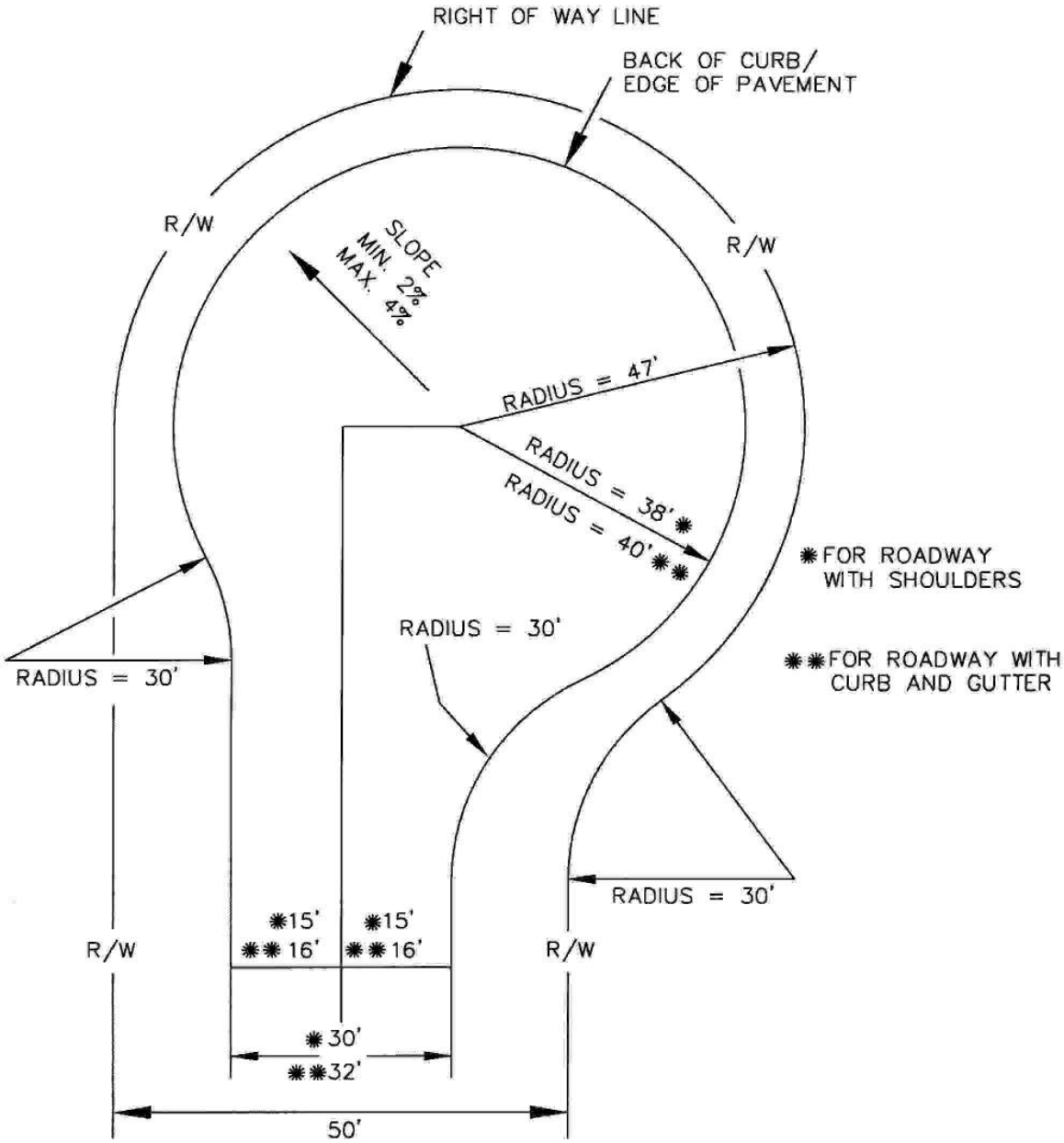

DWM 02/19/02 Approved Date Revisions	COUNTY OF BOONE MISSOURI PUBLIC WORKS	LOCAL ROAD TYPICAL OFFSET CUL-DE-SAC	110.11

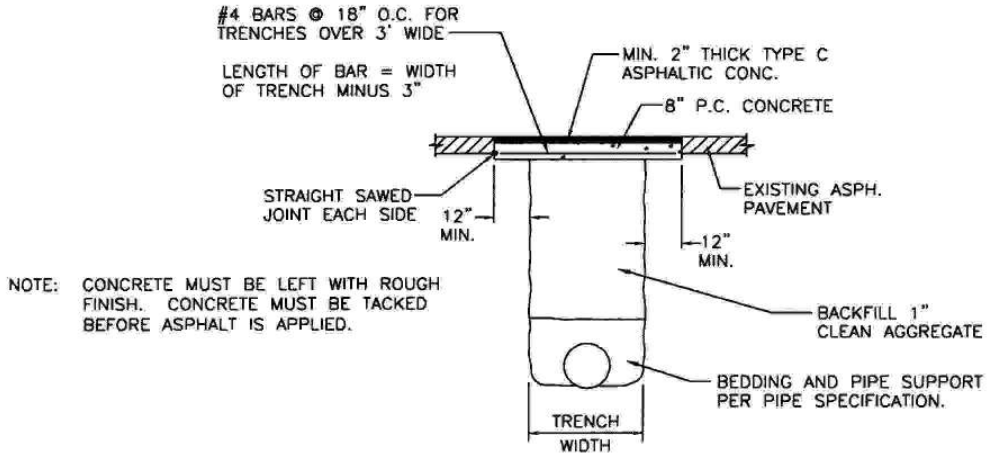

NOTE: CONCRETE MUST BE LEFT WITH ROUGH FINISH. CONCRETE MUST BE TACKED BEFORE ASPHALT IS APPLIED.

EXISTING ASPHALTIC PAVEMENT

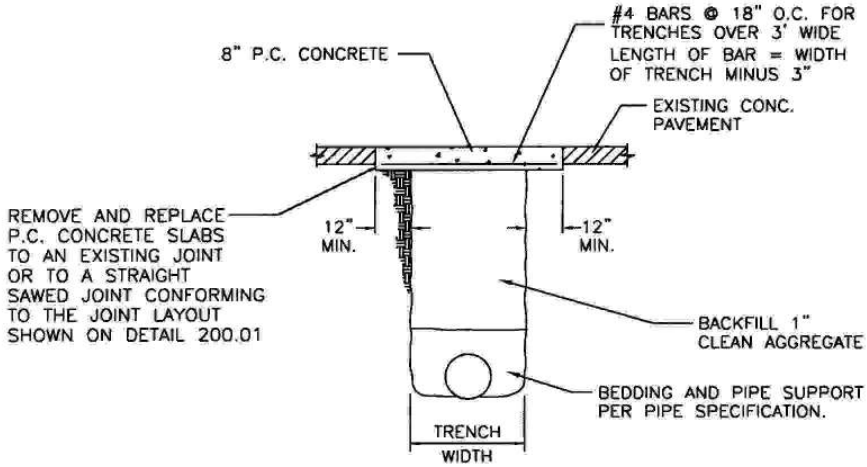

EXISTING CONCRETE PAVEMENT

NOTES: 1) IF THE DISTANCE FROM SAW-CUT TO ANY LONGITUDINAL OR TRANSVERSE JOINT OR CRACK IS LESS THAN 4', THE PAVEMENT SHALL BE REMOVED TO THAT TRANSVERSE JOINT OR CRACK.

2) CONCRETE SHALL BE CLASS AA.

3) HIGH/EARLY CONCRETE IS PERMITED WITH AUTHORIZATION.

Approved 02/19/02 Date	COUNTY OF BOONE MISSOURI PUBLIC WORKS	PATCHING PAVED STREETS	120.01
Revisions			

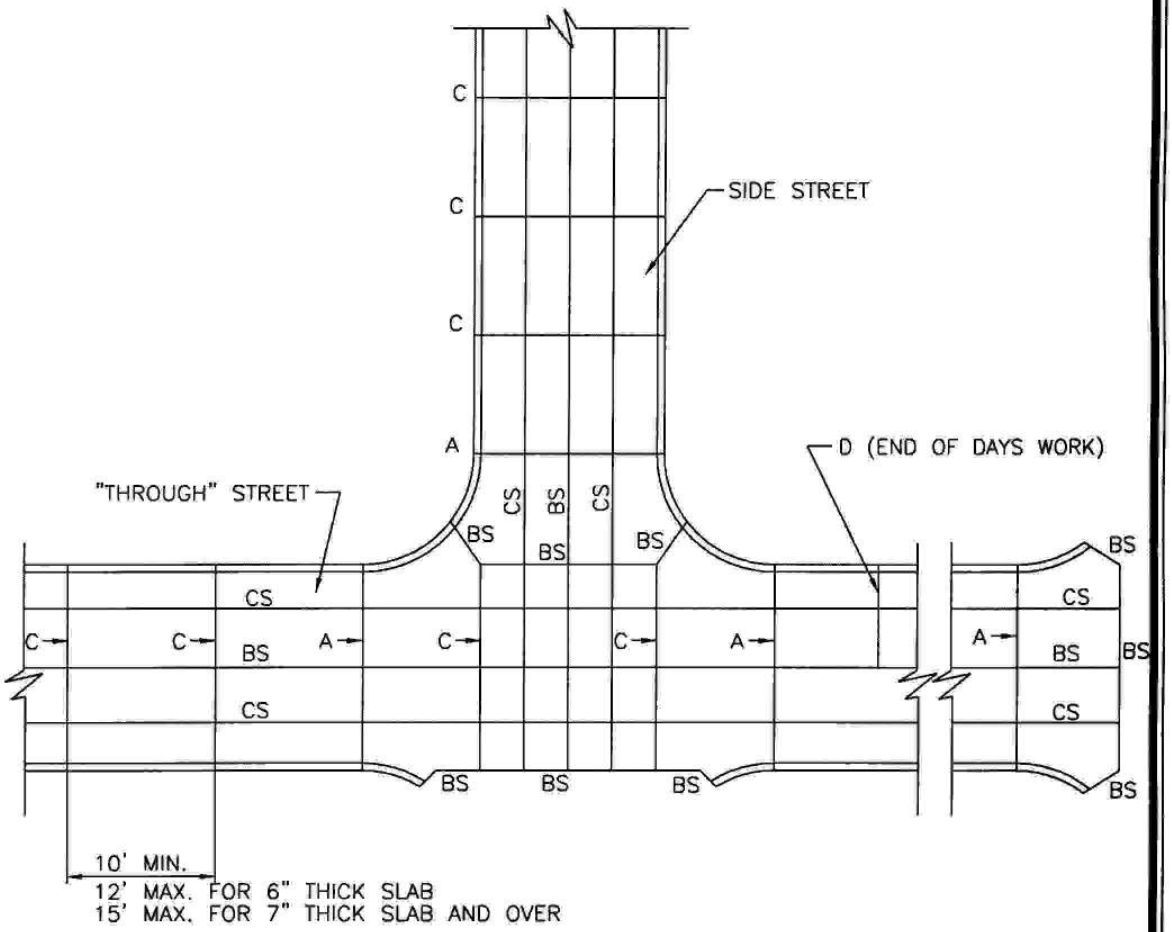

JOINT LOCATION PLAN

NOTE:

1. TRANSVERSE TYPE C JOINTS SHALL BE SAWED AS SOON AS CONCRETE CAN WITHSTAND RAVELING, JOINTS SHALL BE CLEANED AND FILLED WITH BITUMINOUS COMPOUND IMMEDIATELY FOLLOWING SAWING.
   NO TRAFFIC SHALL BE ALLOWED ON ROADWAY UNTIL JOINTS ARE SEALED.
2. INSTALL TYPE A EXPANSION JOINTS AT INTERSECTIONS, AND AT STRUCTURES.
3. INSTALL TYPE A EXPANSION JOINTS AT PC & PT OF CURVES. WITH DEFLECTION ANGLE OF GREATER THAN 30°.
4. INSTALL TYPE A EXPANSION JOINT AT BULB OF CUL-DE-SAC.
5. USE TYPE D JOINT AT END OF DAYS WORK.
6. ALL JOINTS TO BE FILLED PER SECTION A-1, 231.6.8

DWM 02/19/02 Approved Date Revisions	COUNTY OF BOONE MISSOURI PUBLIC WORKS	**JOINT DETAILS (P.C. Concrete Pavement)**	**200.01A**

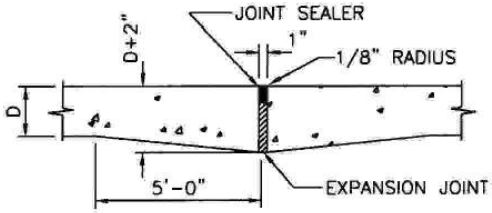

TYPE A
EXPANSION JOINT

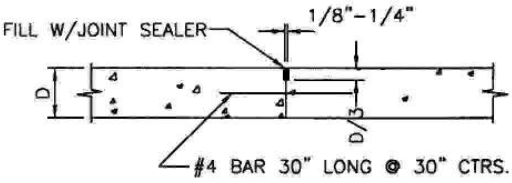

TYPE Ⓒ - CONSTRUCTED WITHOUT TIE BAR
TYPE ⓒⓢ - REQUIRES TIE BAR

TYPE C & CS
SAWED OR PREMOLDED STRIP

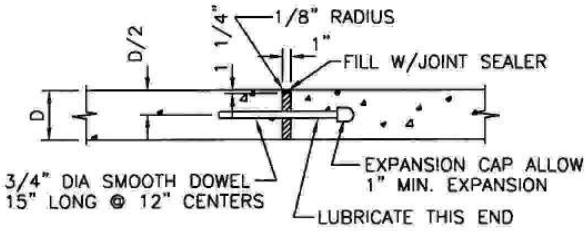

TYPE A - ALTERNATE
EXPANSION JOINT

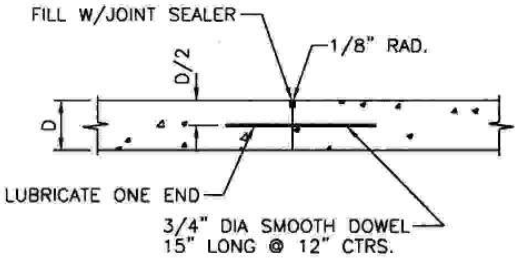

TYPE D
TRANSVERSE CONSTRUCTION JOINT

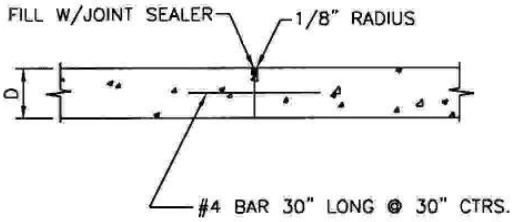

TYPE BS
KEYED CONSTRUCTION JOINT
(With Steel)

NOTE: JOINT SEALER - SEE SECTION 1-A, 231.6.8.

DWM 02/19/02 Approved Date Revisions	COUNTY OF BOONE MISSOURI PUBLIC WORKS	JOINT DETAILS (P.C. Concrete Pavement)	200.01B

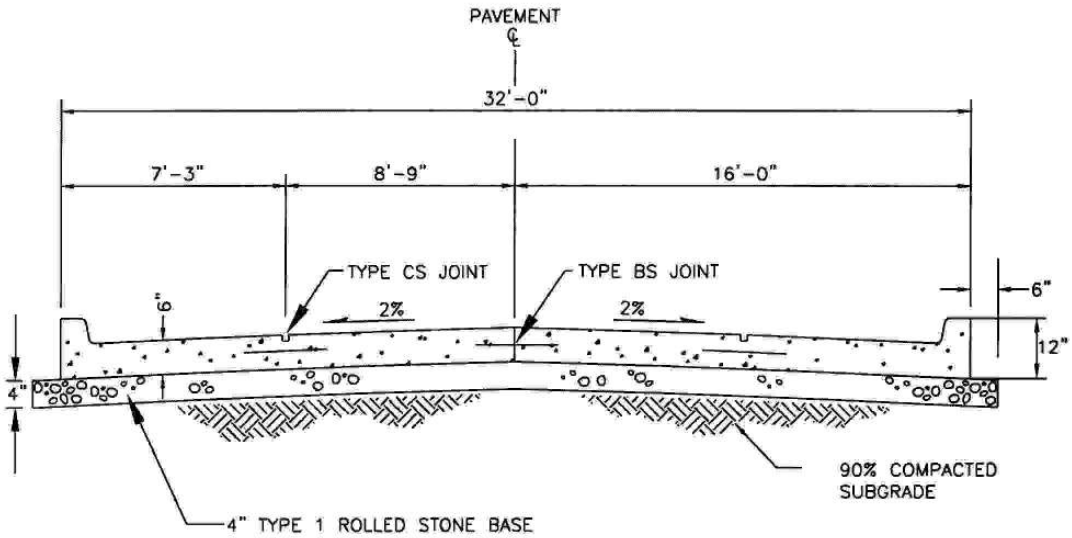

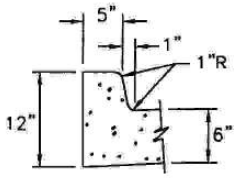

INTEGRAL CURB SECTION

ALTERNATE: SEE DRAWING 400.02

ROLLBACK CURB MAY BE USED. DESIGN ENGINEER SHALL PROVIDE CURB SECTION AND DESIGN STORMWATER IMPROVEMENTS TO MEET B.C.P.W. APPENDIX A. DESIGN ENGINEER MUST ALSO PROVIDE DESIGN FOR SIDEWALK RAMP CONNECTIONS WITH DETAILS.

NOTES:

1. ALL P.C. CONCRETE SHALL BE CLASS A.
2. SEE DETAIL 200.01A AND 200.01B FOR JOINT DETAILS.

Dam 02/19/02 Approved Date Revisions	COUNTY OF BOONE MISSOURI PUBLIC WORKS	LOCAL STREET (Concrete Pavement)	210.01

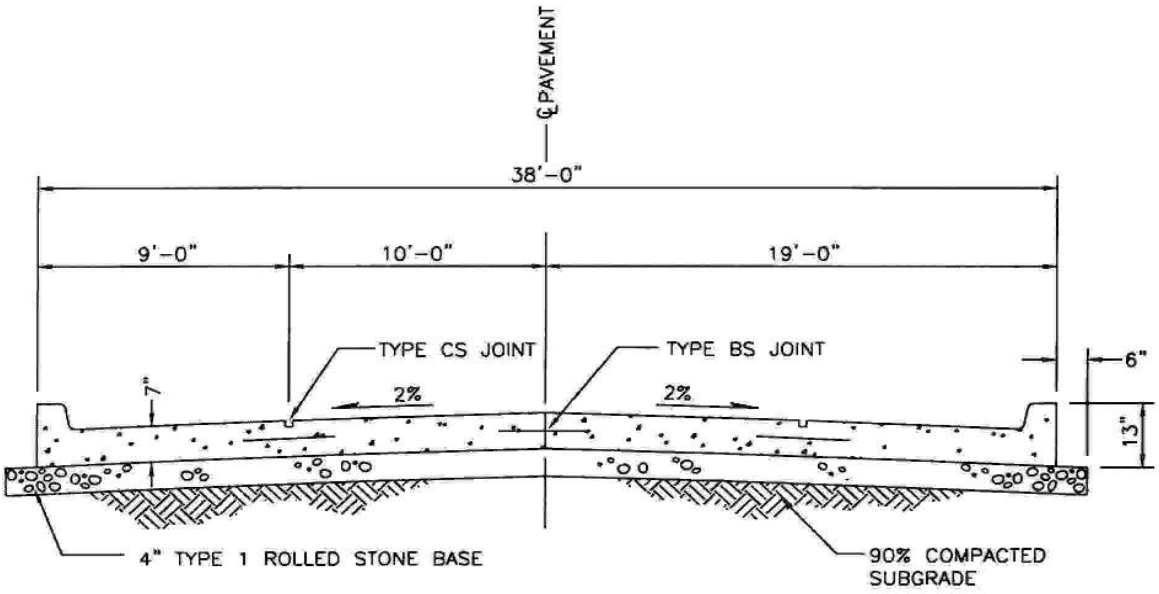

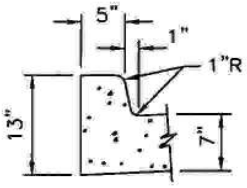

INTEGRAL CURB SECTION

NOTES:

1. ALL P.C. CONCRETE SHALL BE CLASS A.
2. SEE DETAIL 200.01A AND 200.01B FOR JOINT DETAILS.

DWM Approved 02/19/02 Date Revisions	COUNTY OF BOONE MISSOURI PUBLIC WORKS	COLLECTOR STREET (Concrete Pavement)	220.01

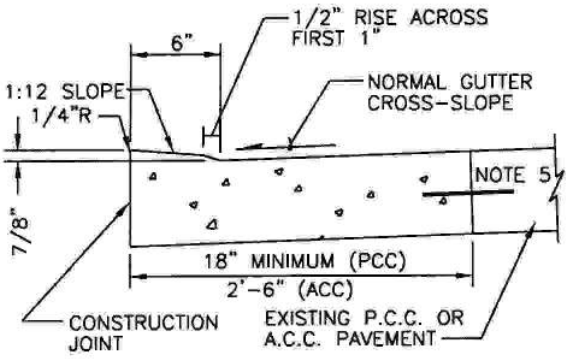

SIDEWALK RAMP CURB
(Alternate)

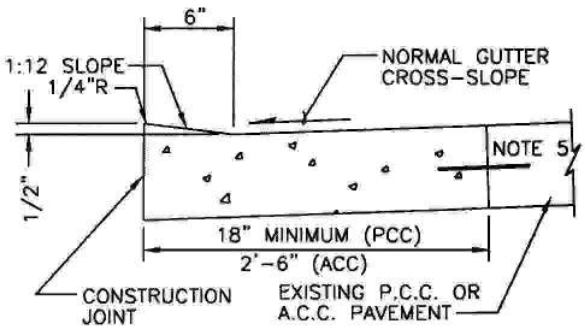

SIDEWALK RAMP CURB

PCC PAVEMENT NOTES:

1. CONCRETE SHALL BE CLASS A.
2. PAVEMENT THICKNESS SHALL MATCH EXISTING. BASE SHALL MATCH EXISTING
3. EXPANSION JOINTS AND CONTRACTION JOINTS SHALL BE PLACED AT LOCATIONS SIMILAR TO THE PAVEMENT WHICH WAS REMOVED.
4. CURB EDGE SHALL BE TOOLED WITH 1/4" RADIUS
5. WHERE EXISTING PAVEMENT IS P.C.C., LOW CURB REPLACEMENT SHALL BE DOWELLED INTO EXISTING. 12" LONG #4 BARS AT 24" CTR.

ACC PAVEMENT NOTES:

1. CONCRETE SHALL BE CLASS A.
2. GUTTER THICKNESS SHALL MATCH EXISTING, BASE SHALL MATCH EXISTING
3. EXPANSION JOINTS AND CONTRACTION JOINTS SHALL BE PLACED AT LOCATIONS SIMILAR TO THE CURB AND GUTTER WHICH WAS REMOVED.
4. CURB EDGE SHALL BE TOOLED WITH 1/4" RADIUS

DWM Approved	02/19/02 Date	COUNTY OF BOONE MISSOURI PUBLIC WORKS	CURB DETAILS (Sidewalk Ramp)	400.01
Revisions				

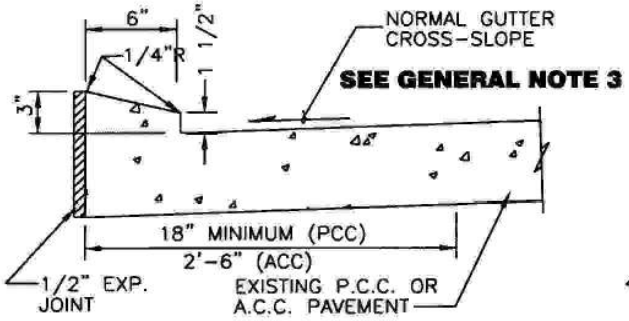

RESIDENTIAL DRIVEWAY CURB

MAXIMUM RISE (PREFERRED)

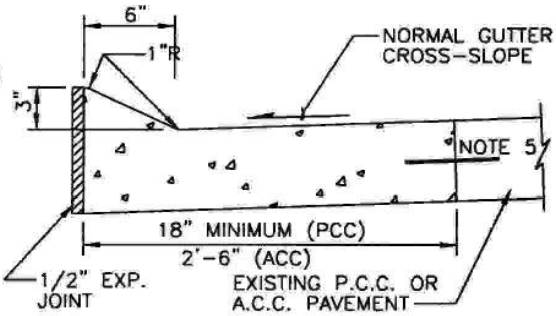

RESIDENTIAL DRIVEWAY CURB

MAXIMUM RISE (ALTERNATE)

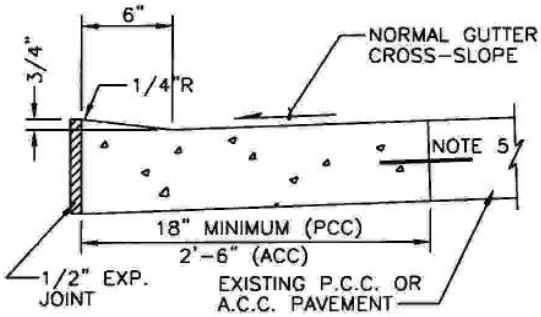

RESIDENTIAL DRIVEWAY CURB

MINIMUM RISE

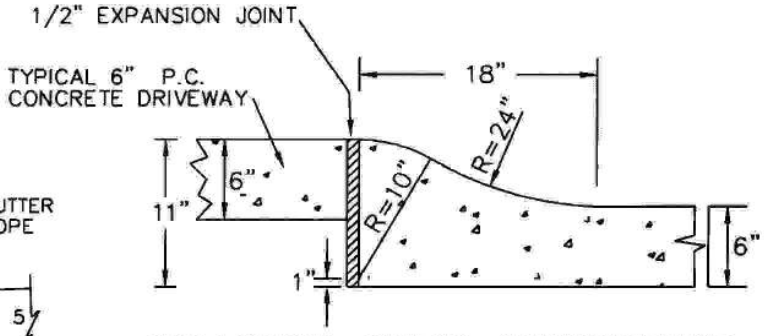

ROLLBACK CURB ALTERNATIVE

GENERAL NOTES:

1. ELEVATION OF DRIVEWAY AT R.O.W. LINE REQUIRED TO BE A MINIMUM OF 8 1/4" ABOVE GUTTER ELEVATION. VERIFY R.O.W. WIDTH AND ALLOWABLE DRIVEWAY SLOPES PRIOR TO CONSTRUCTING MINIMUM RISE DRIVEWAY CURB.

2. ALTERNATE CURB PROFILES WHICH FALL WITHIN THE MINIMUM RISE AND MAXIMUM RISE CURBS SHOWN WILL BE APPROVED. SLOPE ACROSS RESIDENTIAL DRIVEWAY CURB TOP MUST BE AT LEAST 1/2" IN 6" TOWARD THE STREET.

3. FOR RESIDENTIAL DRIVEWAYS, HORIZONTAL SAWING OF CURB IS REQUIRED. HORIZONTAL SAWING NOT ALLOWED ON NEW CONSTRUCTION WHERE DRIVEWAYS ARE IDENTIFIED. HORIZONTAL SAWING MACHINES AND METHOD REQUIRES PRIOR APPROVAL.

PCC / ACC PAVEMENT NOTES:

1. CONCRETE SHALL BE CLASS A.
2. PAVEMENT THICKNESS SHALL MATCH EXISTING. BASE SHALL MATCH EXISTING
3. EXPANSION JOINTS AND CONTRACTION JOINTS SHALL BE PLACED AT LOCATIONS SIMILAR TO THE PAVEMENT WHICH WAS REMOVED.
4. CURB EDGE SHALL BE TOOLED WITH 1/4" RADIUS
5. WHERE EXISTING PAVEMENT IS P.C.C., LOW CURB REPLACEMENT SHALL BE DOWELLED INTO EXISTING. 12" LONG #4 BARS AT 24" CTR.

Approved 02/19/02 Date	COUNTY OF BOONE MISSOURI PUBLIC WORKS	CURB DETAILS (Residential Driveway)	400.02
Revisions			

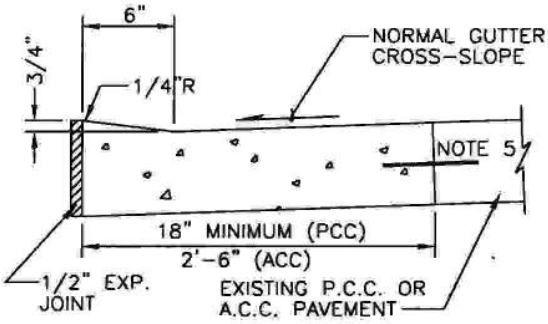

COMMERCIAL DRIVEWAY CURB

PCC PAVEMENT NOTES:

1. CONCRETE SHALL BE CLASS A.
2. PAVEMENT THICKNESS SHALL MATCH EXISTING. BASE SHALL MATCH EXISTING
3. EXPANSION JOINTS AND CONTRACTION JOINTS SHALL BE PLACED AT LOCATIONS SIMILAR TO THE PAVEMENT WHICH WAS REMOVED.
4. CURB EDGE SHALL BE TOOLED WITH 1/4" RADIUS
5. WHERE EXISTING PAVEMENT IS P.C.C., LOW CURB REPLACEMENT SHALL BE DOWELLED INTO EXISTING. 12" LONG #4 BARS AT 24" CTR.

ACC PAVEMENT NOTES:

1. CONCRETE SHALL BE CLASS A.
2. GUTTER THICKNESS SHALL MATCH EXISTING, BASE SHALL MATCH EXISTING
3. EXPANSION JOINTS AND CONTRACTION JOINTS SHALL BE PLACED AT LOCATIONS SIMILAR TO THE CURB AND GUTTER WHICH WAS REMOVED.
4. CURB EDGE SHALL BE TOOLED WITH 1/4" RADIUS

Approved 02/19/02 Date	COUNTY OF BOONE MISSOURI PUBLIC WORKS	CURB DETAILS (Commercial Driveway)	400.03
Revisions			

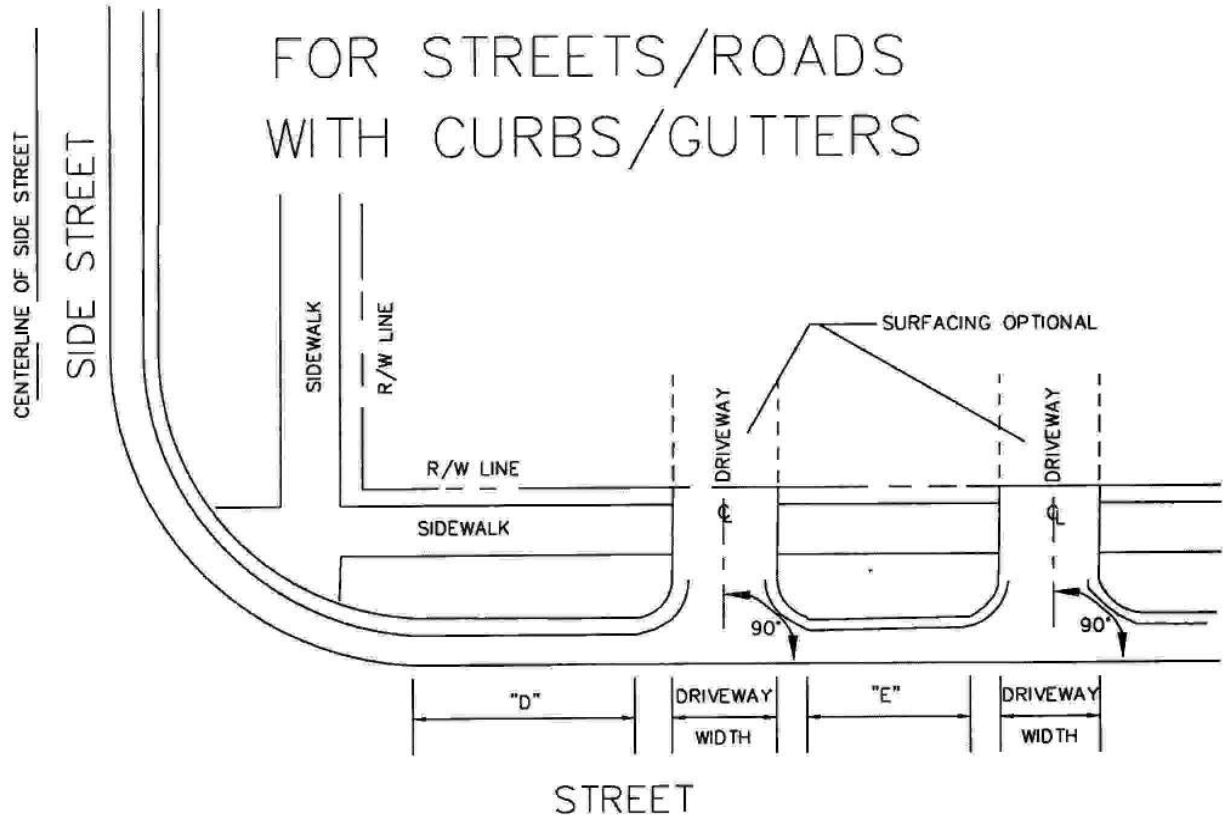

TYPE OF STREET	MINIMUM DISTANCES *		DRIVEWAY WIDTH	
	"D"	"E"	MIN.	MAX.
LOCAL	30'	10'	30'	10'
COLLECTOR	150'	50'	30'	10'
ARTERIAL	400'	150'	30'	10'
COMMERCIAL/INDUSTRIAL	150'	150'	20'	40'

* MINIMUM DISTANCES MEASURED FROM POINT OF CURVATURE TO POINT OF CURVATURE

DRIVEWAY LOCATIONS & DIMENSIONS

NTS

DWM 02/19/02
Approved Date

Revisions

COUNTY OF BOONE MISSOURI
PUBLIC WORKS

FOR STREETS W/CURBS
Driveway Location and Dimensions

410.01A

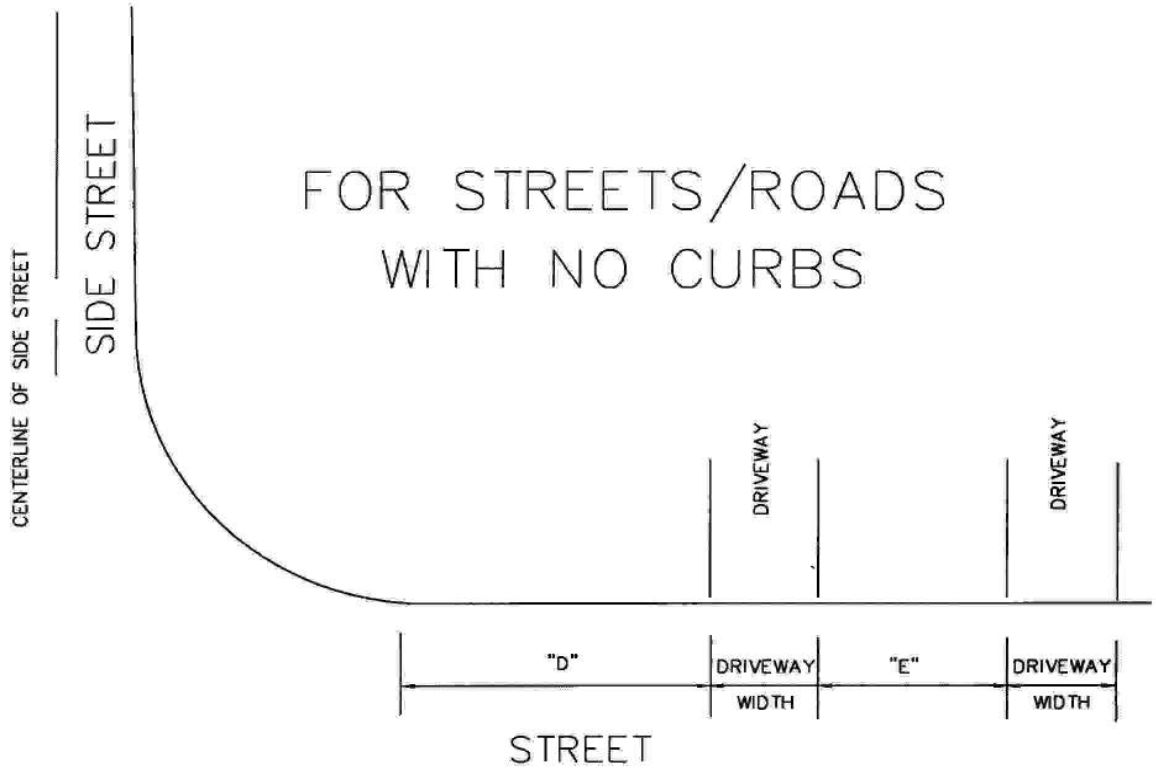

TYPE OF STREET	MINIMUM DISTANCES *		DRIVEWAY WIDTH	
	"D"	"E"	MIN.	MAX.
LOCAL	30'	10'	30'	10'
COLLECTOR	150'	50'	30'	10'
ARTERIAL	400'	150'	30'	10'
COMMERCIAL/INDUSTRIAL	150'	150'	20'	40'

* MINIMUM DISTANCES MEASURED FROM POINT OF CURVATURE TO POINT OF CURVATURE

DRIVEWAY LOCATIONS & DIMENSIONS

NTS

DWM Approved	02/19/02 Date	COUNTY OF BOONE MISSOURI PUBLIC WORKS	FOR STREETS W/O CURBS Driveway Location and Dimensions	410.01B
Revisions				

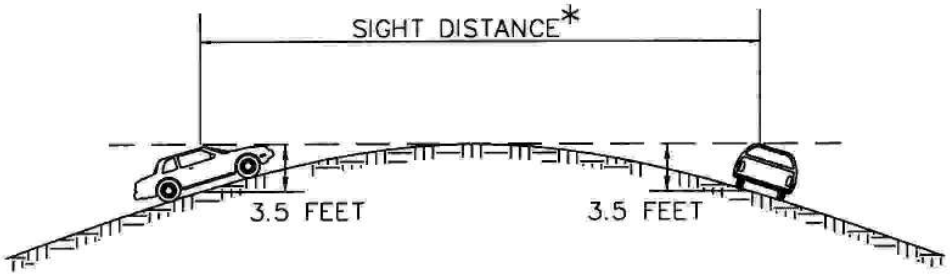

VERTICAL STOPPING DISTANCE

* **NOTE: SEE APPENDIX B, 1.5 FOR SIGHT DISTANCE REQUIREMENTS**

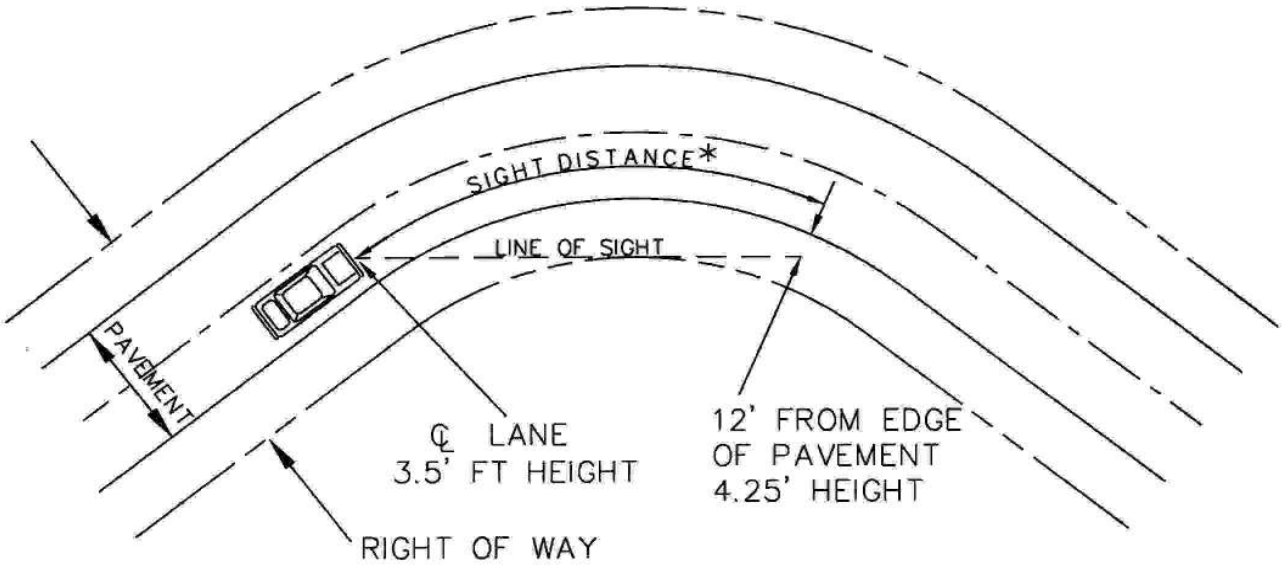

HORIZONTAL STOPPING DISTANCE

Approved 02/19/02 Date	COUNTY OF BOONE MISSOURI PUBLIC WORKS	SIGHT DISTANCE DIAGRAM	410.01C
Revisions			

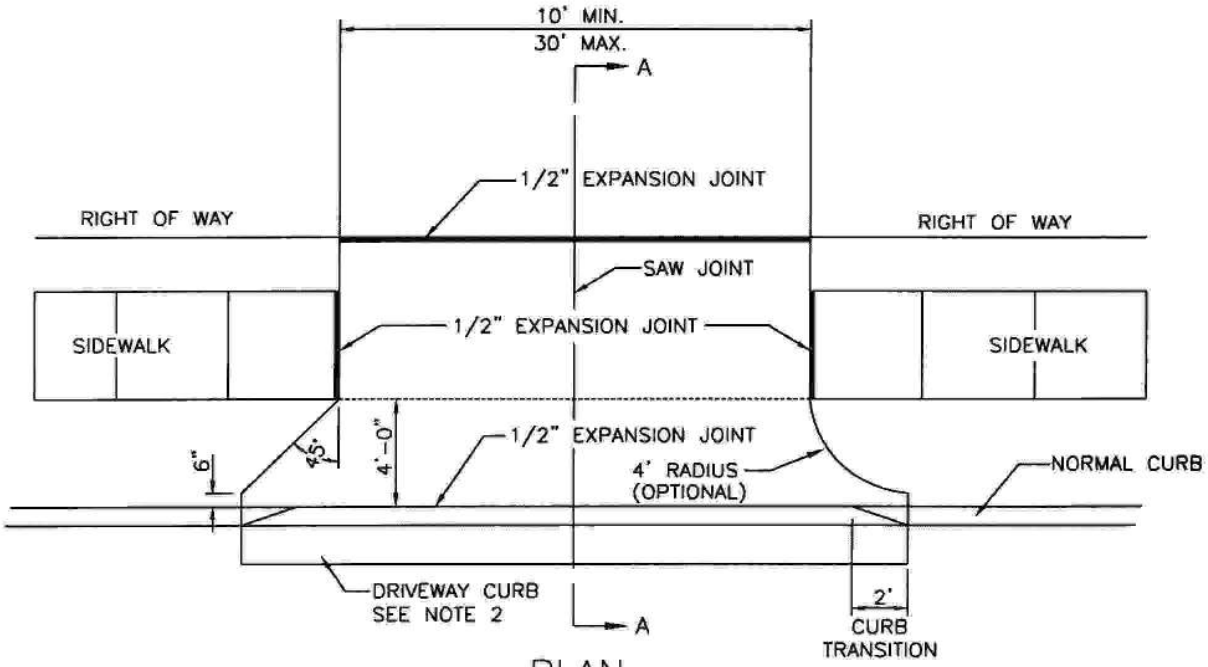

PLAN

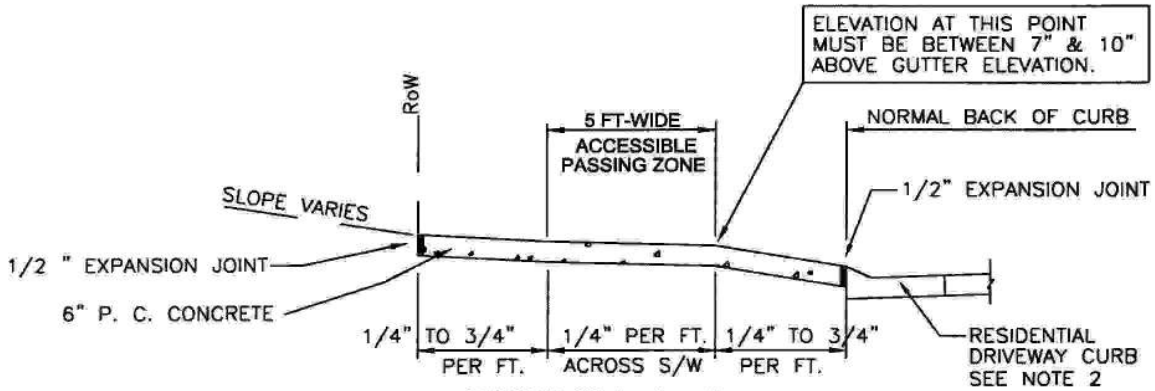

SECTION A–A

NOTES:

1. DRIVEWAY APPROACH SHALL BE 6" CLASS A CONCRETE.
2. **RECOMMEND CURB CUT** OR REPLACE STANDARD CURB & GUTTER SECTION WITH DRIVEWAY CURB SECTION. SEE DETAIL 400.02. IF ROLLBACK CURB OPTION IS USED, CURB DOES NOT HAVE TO BE REMOVED. PLACE 1/2" EXPANSION JOINT BETWEEN CURB AND DRIVEWAY APPROACH.
3. EXPANSION JOINT SHALL BE 1/2" PREFORMED CORK OR BITUMINOUS EXPANSION JOINT MATERIAL.
4. ALL DRIVEWAY APPROACHES SHALL SLOPE TOWARD THE STREET.
5. ALL DRIVEWAY APPROACHES SHALL BE CONSTRUCTED TO ACCOMODATE SIDEWALKS. (EXISTING AND FUTURE) STANDARD SIDEWALK LOCATION IS 1 FT INSIDE RIGHT OF WAY LINE.
6. DRIVEWAY APPROACH SHALL PROVIDE A MINIMUM 5' WIDE ACCESSIBLE SIDEWALK PASSING ZONE.
7. DRIVEWAY SLOPE ACROSS ACCESSIBLE SIDEWALK PASSING ZONE IS 1/4" PER FT.
8. MINIMIZE SIDEWALK WARPING ADJACENT TO DRIVEWAY APPROACH.
9. DRIVEWAY SLOPE WITHIN RIGHT OF WAY SHALL NOT EXCEED 3/4" PER FOOT.
10. ALL JOINTS SHALL BE CLEANED AND SEALED PER SECTION A–1, 231.6.8.

Approved 02/19/02 Date Revisions	COUNTY OF BOONE MISSOURI PUBLIC WORKS	DRIVEWAY (Residential with Curb and Gutter)	410.02

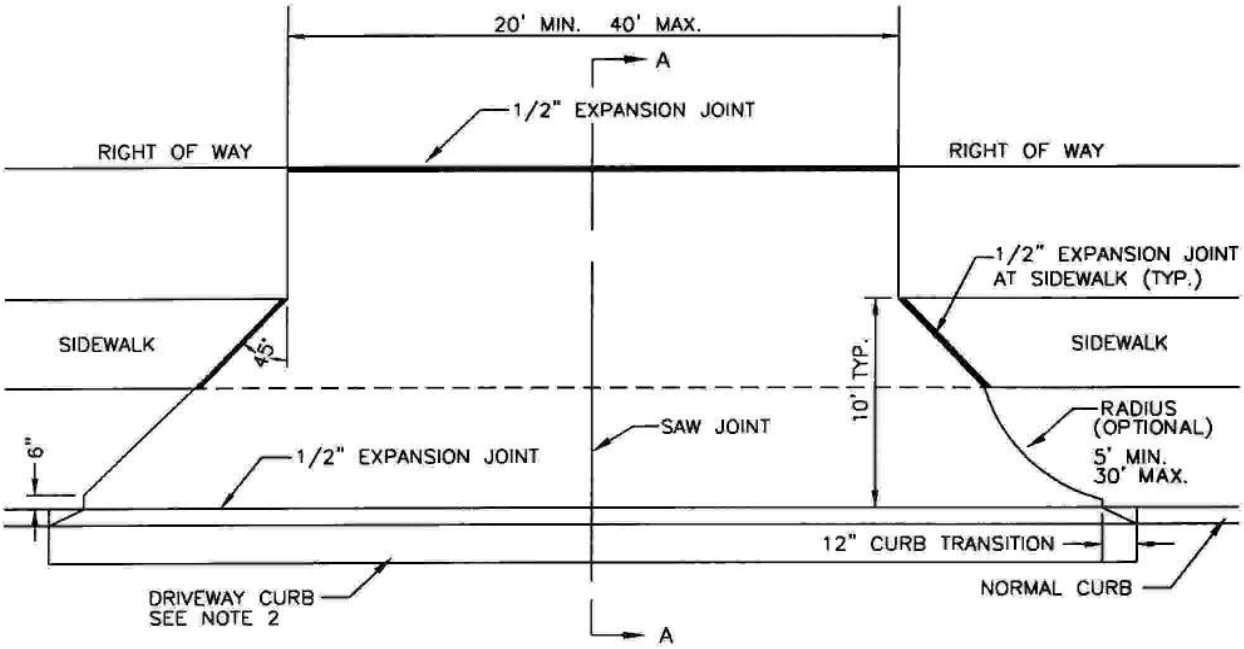

PLAN

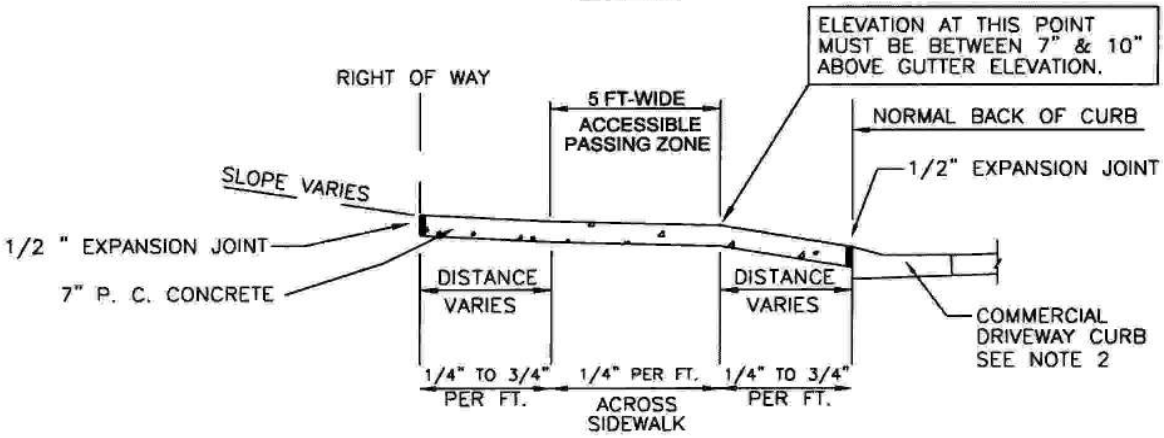

SECTION A–A

NOTES:

1. DRIVEWAY APPROACH SHALL BE 7" THICK CLASS A CONCRETE.
2. REPLACE STANDARD CURB & GUTTER SECTION WITH DRIVEWAY CURB SECTION. SEE DETAIL 400.03.
3. EXPANSION JOINT SHALL BE 1/2" PREFORMED CORK OR BITUMINOUS EXPANSION JOINT MATERIAL.
4. ALL DRIVEWAY APPROACHES SHALL SLOPE TOWARD THE STREET.
5. ALL DRIVEWAY APPROACHES SHALL BE CONSTRUCTED TO ACCOMODATE SIDEWALKS. (EXISTING AND FUTURE) STANDARD SIDEWALK LOCATION IS 1 FOOT OFF OF RIGHT OF WAY LINE.
6. DRIVEWAY APPROACH SHALL PROVIDE A MINIMUM 5' WIDE ACCESSIBLE SIDEWALK PASSING ZONE.
7. DRIVEWAY SLOPE ACROSS ACCESSIBLE SIDEWALK PASSING ZONE IS 1/4" PER FT.
8. MINIMIZE SIDEWALK WARPING ADJACENT TO DRIVEWAY APPROACH.
9. DRIVEWAY SLOPE WITHIN RIGHT OF WAY SHALL NOT EXCEED 3/4" PER FOOT.

DWM Approved	02/19/02 Date	COUNTY OF BOONE MISSOURI PUBLIC WORKS	DRIVEWAY (Commercial)	410.03
Revisions				

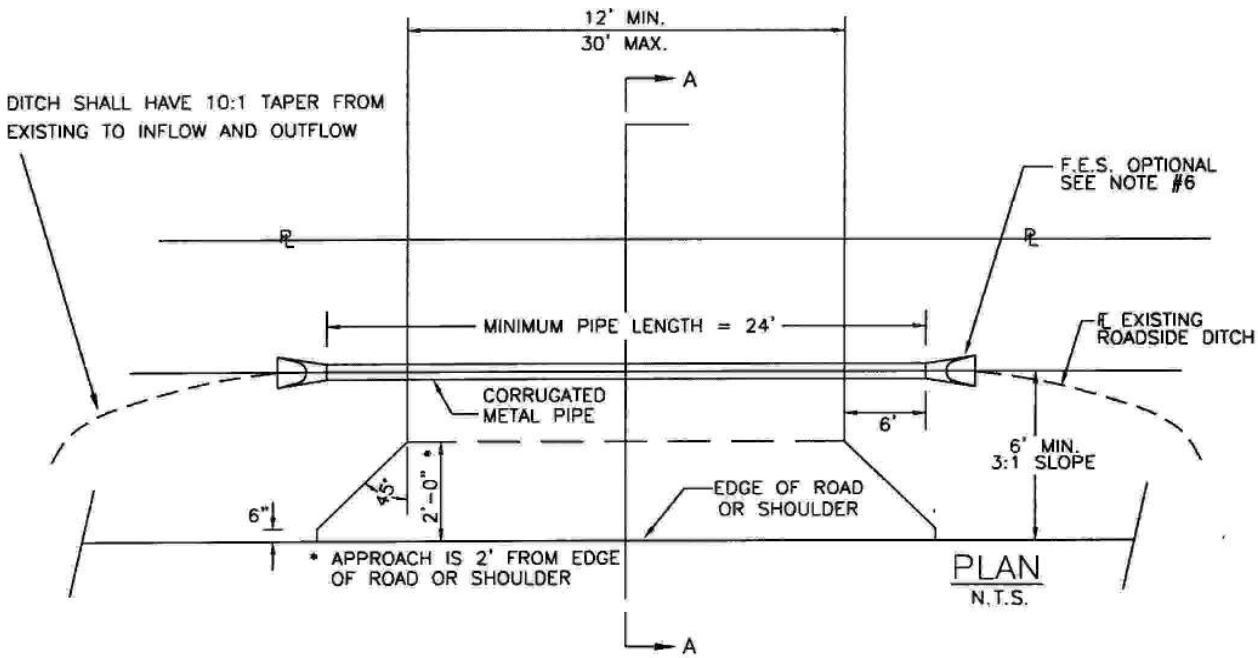

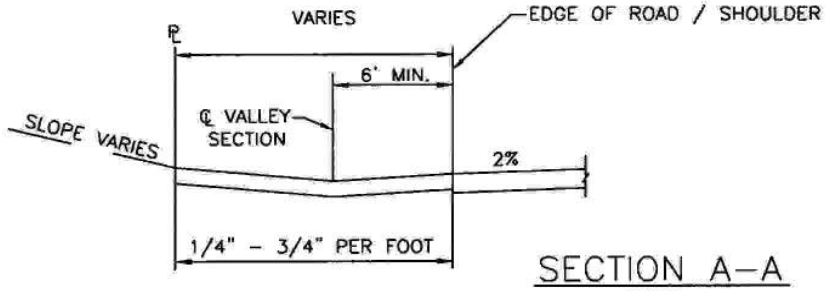

SECTION A-A
N.T.S.

NOTES:

1. MINIMUM APPROACH ON A HARD SURFACED ROADWAY SHALL BE 2' FROM EDGE OF SHOULDER OR TRAVELED ROADWAY.
2. APPROACH SHALL BE A COMMERCIAL GRADE ASPHALT HOT MIX EQUAL TO DEPTH OF SHOULDER OR ROADWAY, OR A MINIMUM OF 5", WHICHEVER IS GREATER.
3. A 6" THICK CLASS A P.C. CONCRETE APPROACH CAN BE USED ONLY WHEN CONNECTED TO A CONCRETE ROADWAY OR SHOULDER.
4. VALLEY SECTION IS REQUIRED. VALLEY SHALL BE A MINIMUM OF 6' FROM EDGE OF ROADWAY OR SHOULDER
5. PIPE UNDER DRIVEWAY SHALL BE SIZED TO CARRY 10 YEAR STORM, MINIMUM 15" DIAMETER. SEE APPENDIX B, 1.1.
6. PIPE LENGTHS SHALL BE BASED ON 3:1 SLOPES. USE OF FLARED END SECTIONS (FES) ARE AT OWNER'S DISCRETION. NOTE: FES WILL NOT BE REPLACED BY BCPW SHOULD THEY BECOME DAMAGED OR NON-FUNCTIONAL.
7. MINIMUM DITCH DEPTH SHALL BE 24".
8. CMP SHALL BE ANNULAR RIVETED AND GALVANIZED OR POLYMERIC COATED. SEE APPENDIX A, SECTION 260.3.5

ALTERNATE METHOD-

WHERE THE ROADSIDE DITCH DRAINS LESS THAN 10,000 SQ. FT. , THE PIPE CAN BE OMITTED. VALLEY SECTION MUST BE INCREASED TO A DEPTH OF 6" AND PAVEMENT SECTION MUST COVER FROM EDGE OF ROADWAY TO 4' PAST THE LOW POINT OF THE VALLEY. PAVEMENT TYPE, OTHER THAN THE 2' APPROACH IS AT OWNER'S DISCRETION.

Approved 02/19/02 Date	COUNTY OF BOONE MISSOURI PUBLIC WORKS	DRIVEWAY Non-Curb and Guttered	410.04
Revisions			

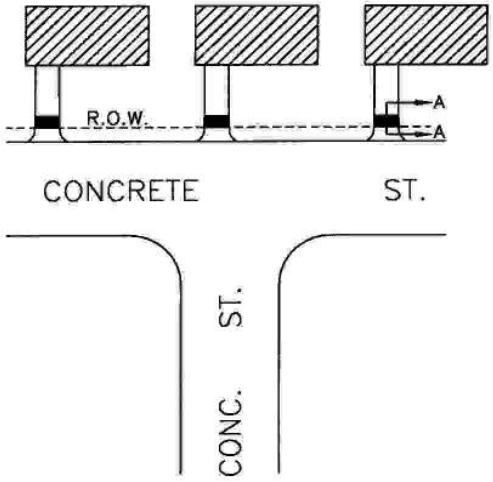

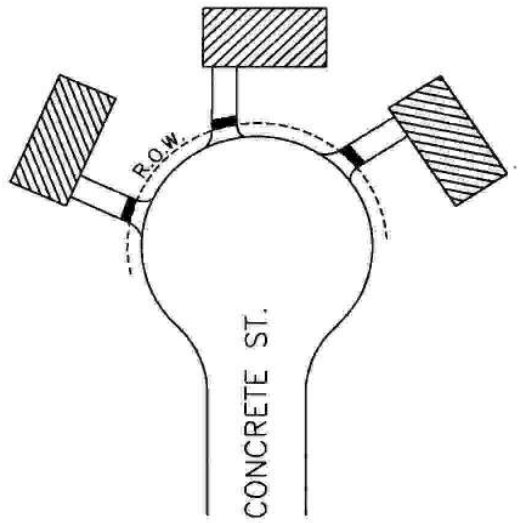

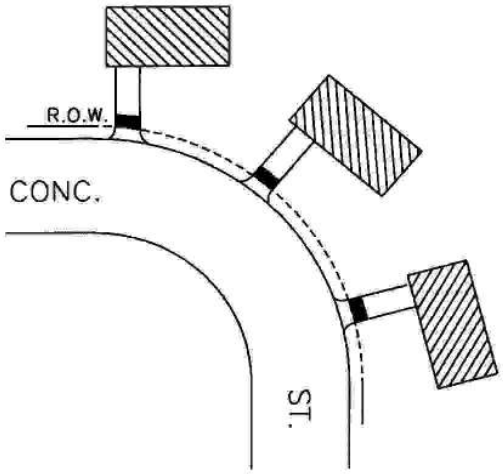

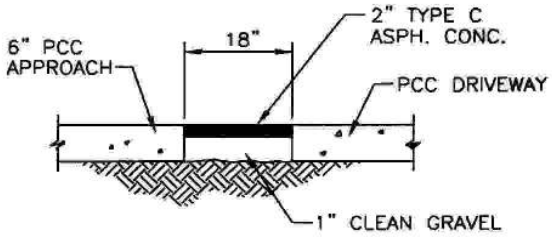

SECTION A–A

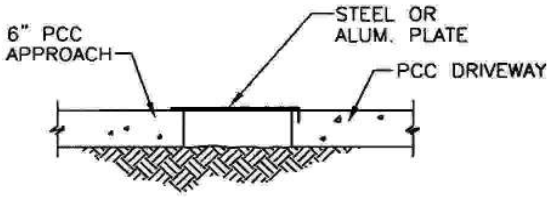

alt. SECTION A–A

THE MOVEMENT OVER TIME OF CONCRETE STREETS DUE PRIMARILY TO THE THERMAL EXPANSION AND CONTRACTION PROPERTIES OF CONCRETE HAS CAUSED DAMAGE TO PRIVATE RESIDENCES IN SOME NEW SUB-DIVISIONS IN BOONE COUNTY WHERE CONCRETE STREETS ARE USED.

IN ORDER TO CONTROL SUCH DAMAGE, THE COUNTY IS RECOMMENDING THE USE OF ONE OF THE JOINT DETAILS ABOVE WHEN THE DRIVEWAY IS LOCATED AS DEPICTED ON THIS DRAWING.

BOONE COUNTY SHALL NOT BE LIABLE FOR ANY DAMAGE THAT MAY OCCUR TO ANY STRUCTURE DUE TO NON-COMPLIANCE WITH THIS RECOMENDATION. A WAIVER MUST BE SIGNED BY OWNER BEFORE DRIVEWAY WILL BE APPROVED. A FEE IN THE AMOUNT TO RECORD A 1 (ONE) PAGE DOCUMENT PAYABLE TO THE RECORDER OF DEEDS WILL BE REQUIRED.

Approved 02/19/02 Date Revisions	PUBLIC WORKS	ALTERNATE EXPANSION JOINTS FOR DRIVEWAYS ON P.C.C. STREETS	410.05

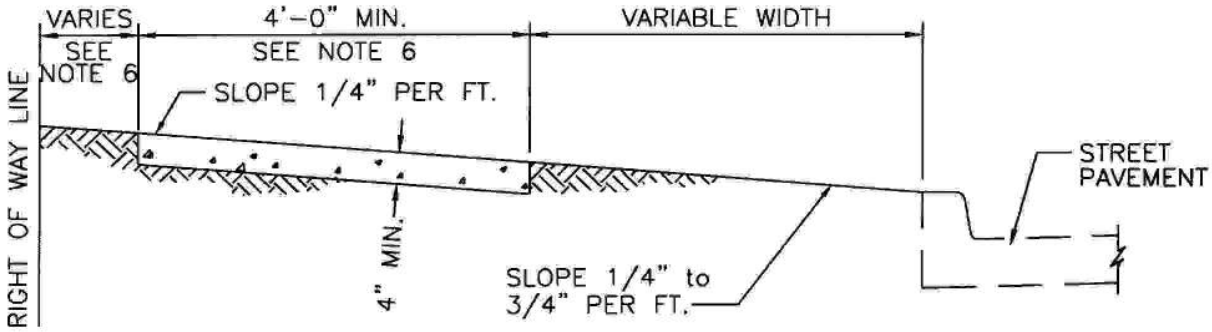

SIDEWALK WITH GRASS PARKWAY

NOTE:

1. SIDEWALK SHALL BE 4" THICK CLASS A CONCRETE.
2. INSTALL 1/2" EXPANSION JOINTS AT INTERSECTIONS, RAMPS, STRUCTURES, AND DRIVEWAY APPROACHES.
3. INSTALL TRANSVERSE SAW JOINTS AT SPACING = SIDEWALK WIDTH.
4. FOR SIDEWALKS WIDER THAN 6 FT, INSTALL LONGITUDINAL SAW JOINT AT ℄, TRANSVERSE SAW JOINT SPACING = 1/2 SIDEWALK WIDTH.
5. FOR SIDEWALKS LESS THAN 5'-0" WIDE, INSTALL A 60" BY 60" PASSING SPACE AT 200 FT MAXIMUM INTERVALS. DRIVEWAYS, RAMP LANDINGS AND INTERSECTING SIDEWALKS WHICH PROVIDE THE REQUIRED AREA QUALIFY AS PASSING SPACE. CROSS SLOPE OF PASSING SPACE CAN NOT EXCEED 1/4" PER FT.
6. STANDARD SIDEWALK PLACEMENT IS 12" FROM RIGHT OF WAY LINE.
7. SIDEWALK WIDTH FOR COLLECTOR STREETS AND ARTERIAL STREETS IS 5'-0".

DWM Approved 02/19/02 Date Revisions	COUNTY OF BOONE MISSOURI PUBLIC WORKS	SIDEWALK	420.01

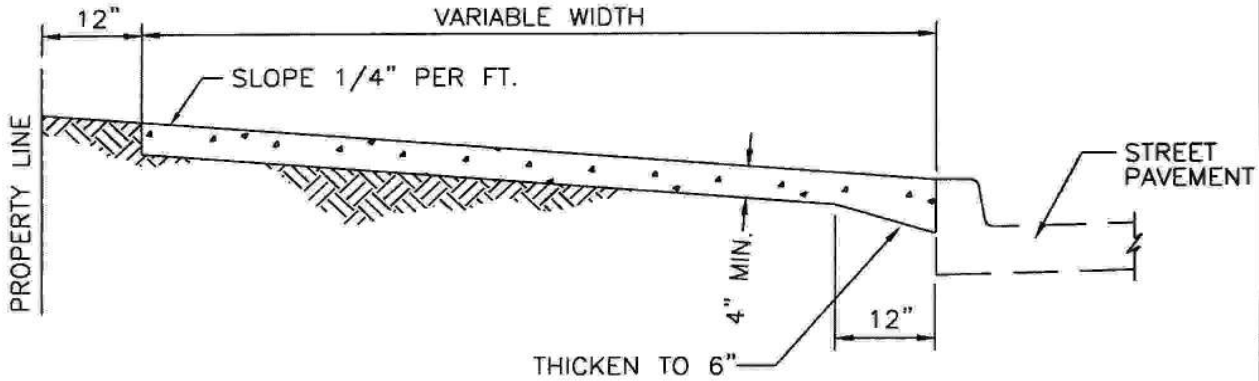

NOTE:

1. SIDEWALK SHALL BE 4" THICK CLASS A CONCRETE.
2. INSTALL 1/2" TRANSVERSE EXPANSION JOINTS TO MATCH STREET OR CURB AND GUTTER EXPANSION JOINTS AND AT ALL DRIVEWAY APPROACHES, AND SIDEWALK RAMPS.
3. INSTALL TRANSVERSE SAW JOINTS AT SPACING = SIDEWALK WIDTH.
4. FOR SIDEWALKS WIDER THAN 6 FT., INSTALL LONGITUDINAL SAW JOINT AT ℄, TRANSVERSE SAW JOINT SPACING = SIDEWALK WIDTH.
5. FOR SIDEWALKS LESS THAN 5'-0" WIDE, INSTALL A 60" BY 60" PASSING SPACE AT 200 FT MAXIMUM INTERVALS. DRIVEWAYS, RAMP LANDINGS AND INTERSECTING SIDEWALKS WHICH PROVIDE THE REQUIRED AREA QUALIFY AS PASSING SPACE. CROSS SLOPE OF PASSING SPACE CAN NOT EXCEED 1/4" PER FT.

Approved 02/19/02 Date	COUNTY OF BOONE MISSOURI PUBLIC WORKS	SIDEWALK AT BACK OF CURB	420.02
Revisions			

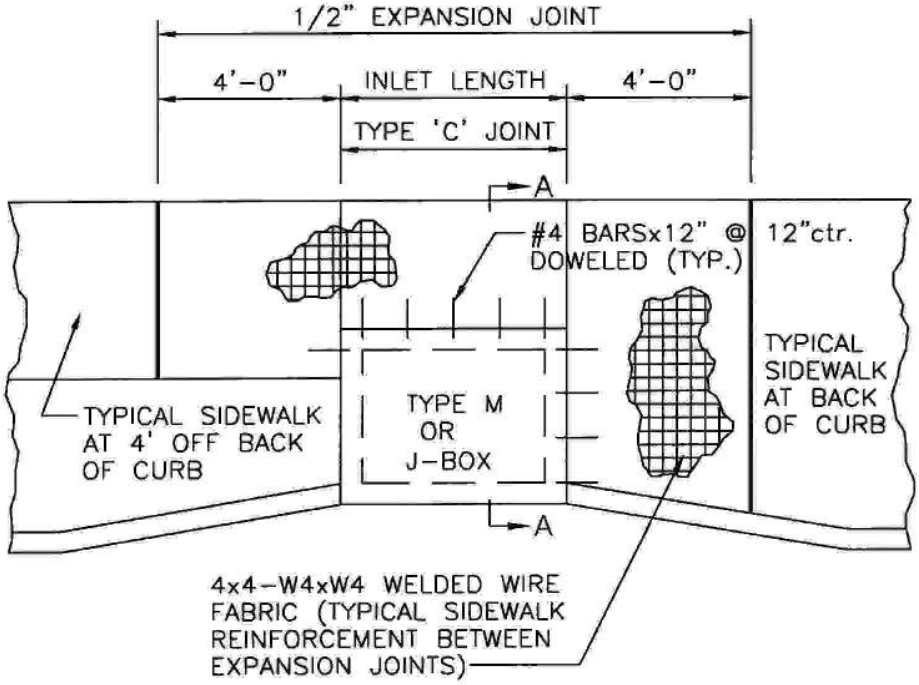

PLAN VIEW

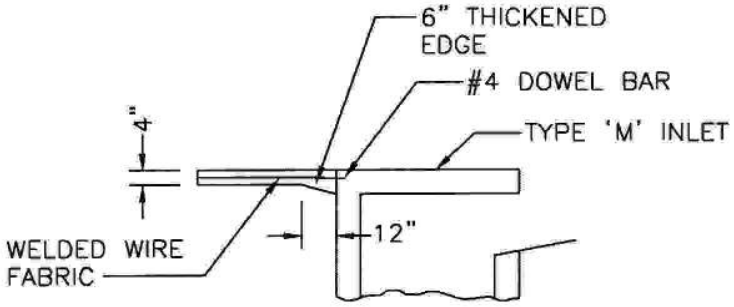

SECTION A-A

NOTES:

1. SIDEWALK SHALL BE 4" THICK CLASS A CONCRETE
2. REINFORCING STEEL SHALL BE GRADE 60

Approved 02/19/02 Date Revisions	COUNTY OF BOONE MISSOURI PUBLIC WORKS	SIDEWALK REINFORCEMENT AT DRAINAGE STRUCTURE	420.03

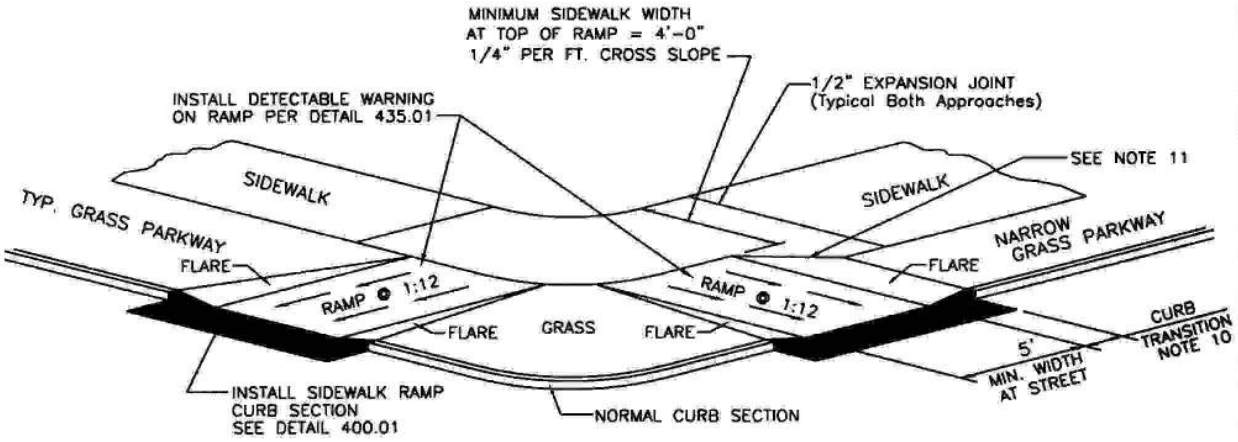

NOTE:

1. RAMP SHALL BE 4" THICK CLASS A CONCRETE.
2. EXPANSION JOINT SHALL BE 1/2" PREFORMED CORK OR BITUMINOUS EXPANSION JOINT MATERIAL.
3. MAXIMUM RAMP CROSS SLOPE IS 1/4" PER FT.
4. ALL SLOPES ARE MEASURED FROM THE HORIZONTAL.
5. REPLACE STANDARD CURB SECTION WITH SIDEWALK RAMP CURB SECTION – DETAIL 400.01
6. RAMP LENGTH IS DEPENDENT ON 1:12 MAX. SLOPE. USE FLATTER WHEN POSSIBLE.
7. LANDING AREA AT TOP OF RAMP SHALL BE 4'-0" MIN WIDTH, CROSS SLOPE OF LANDING SHALL NOT EXCEED 1/4" PER FT., INCREASE SIDEWALK RADIUS TO OBTAIN MINIMUM 4'-0" LANDING.
8. TYPE "A" RAMP NOT APPLICABLE IF SIDEWALK AND PARKWAY WIDTH DOES NOT PROVIDE 4'-0" LANDING AT TOP OF RAMP.
9. FLARES ARE REQUIRED AT RAMPS TO KEEP GRASS PARKWAY SLOPES IN CONFORMANCE WITH THE TYPICAL CROSS SECTION.
10. CURB TRANSITION LENGTH IS DEPENDENT ON FLARE SLOPE
11. IF RAMP EXTENDS INTO NORMAL SIDEWALK, FLARE SLOPE MUST NOT EXCEED 1:10. A LANDING IS REQUIRED, SEE NOTE 7.

Approved 02/19/02 Date	COUNTY OF BOONE MISSOURI PUBLIC WORKS	SIDEWALK RAMP Sidewalk with Grass Parkway (Type A)	430.01
Revisions			

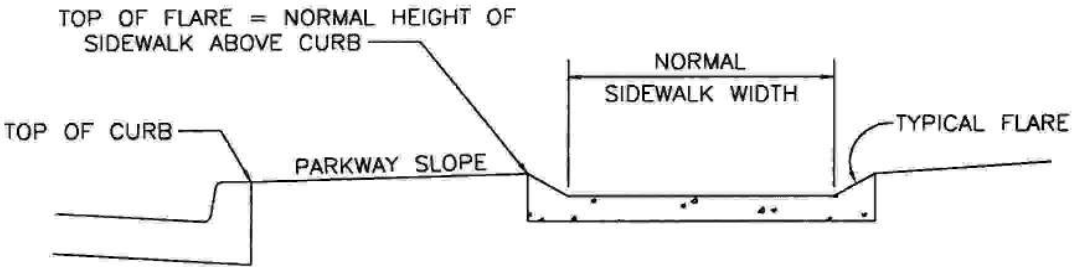

SECTION A–A

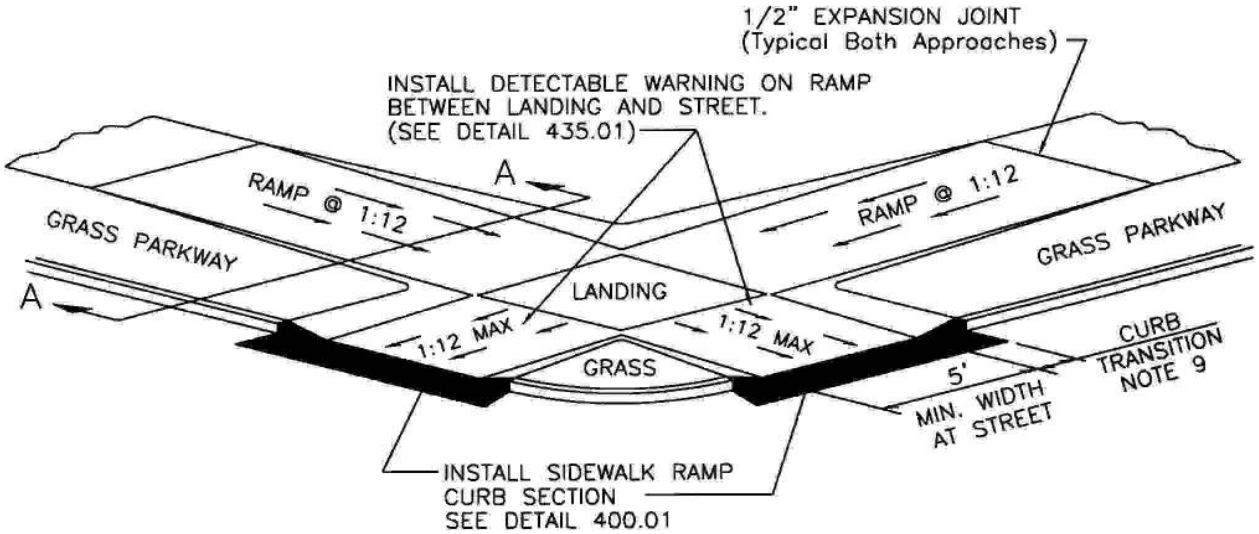

NOTE:

1. RAMP SHALL BE 4" THICK CLASS A CONCRETE.
2. EXPANSION JOINT SHALL BE 1/2" PREFORMED CORK OR BITUMINOUS EXPANSION JOINT MATERIAL.
3. MAXIMUM RAMP CROSS SLOPE IS 1/4" PER FT.
4. ALL SLOPES ARE MEASURED FROM THE HORIZONTAL.
5. REPLACE STANDARD CURB SECTION WITH SIDEWALK RAMP CURB SECTION – DETAIL 400.01
6. RAMP 1:12 MAX. USE FLATTER WHEN POSSIBLE.
7. LANDING AREA SHALL BE 4'–0" MIN WIDTH, CROSS SLOPE OF LANDING SHALL NOT EXCEED 1/4" PER FT.
8. FLARES ARE REQUIRED AT RAMPS TO KEEP GRASS PARKWAY SLOPES IN CONFORMANCE WITH THE TYPICAL CROSS SECTION. (SEE SECTION A–A)
9. CURB TRANSITION LENGTH IS DEPENDENT ON FLARE SLOPE

AWM Approved	02/19/02 Date	COUNTY OF BOONE MISSOURI PUBLIC WORKS	SIDEWALK RAMP Sidewalk with Grass Parkway (Type B)	430.02
Revisions				

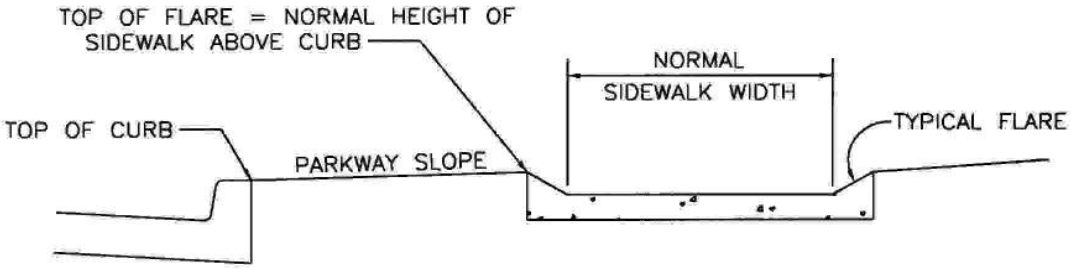

SECTION A–A

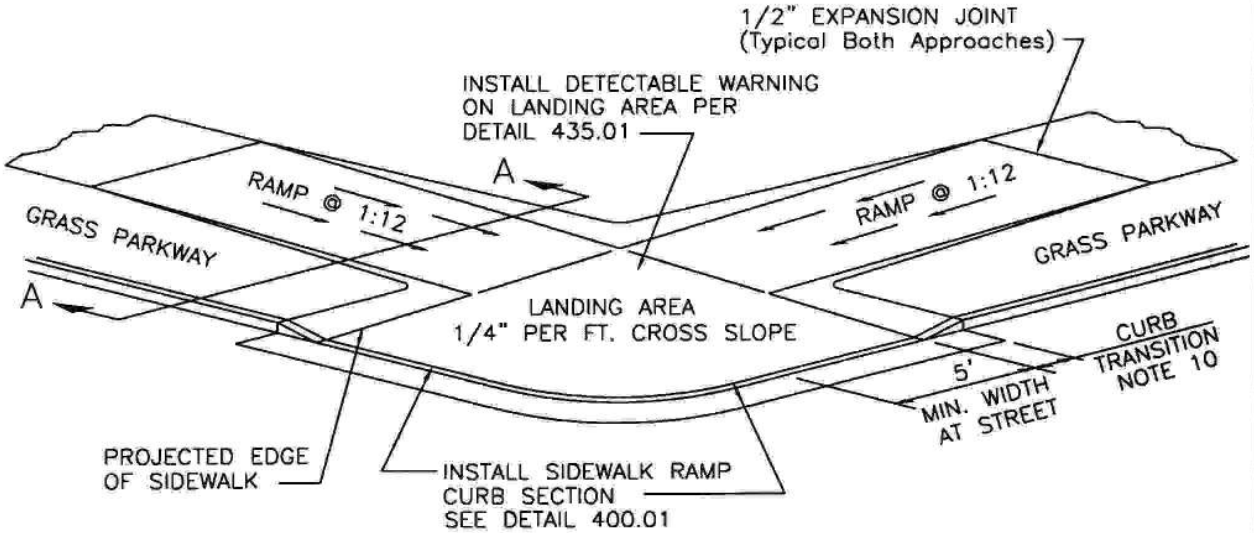

NOTE:

1. RAMP SHALL BE 4" THICK CLASS A CONCRETE.
2. EXPANSION JOINT SHALL BE 1/2" PREFORMED CORK OR BITUMINOUS EXPANSION JOINT MATERIAL.
3. MAXIMUM RAMP CROSS SLOPE IS 1/4" PER FT.
4. ALL SLOPES ARE MEASURED FROM THE HORIZONTAL.
5. REPLACE STANDARD CURB SECTION WITH SIDEWALK RAMP CURB SECTION – DETAIL 400.01
6. RAMP LENGTH IS DEPENDENT ON 1:12 MAX. SLOPE. USE FLATTER WHEN POSSIBLE.
7. LANDING AREA SHALL BE 4'–0" MIN WIDTH, CROSS SLOPE OF LANDING SHALL NOT EXCEED 1/4" PER FT.
8. USE TYPE "C" RAMP ONLY IF TYPE "A" & "B" ARE NOT FEASIBLE.
9. FLARES ARE REQUIRED AT RAMPS TO KEEP GRASS PARKWAY SLOPES IN CONFORMANCE WITH THE TYPICAL CROSS SECTION. (SEE SECTION A–A)
10. CURB TRANSITION LENGTH IS DEPENDENT ON FLARE SLOPE

Approved 02/19/02 Date	COUNTY OF BOONE MISSOURI PUBLIC WORKS	SIDEWALK RAMP Sidewalk with Grass Parkway (Type C)	430.03
Revisions			

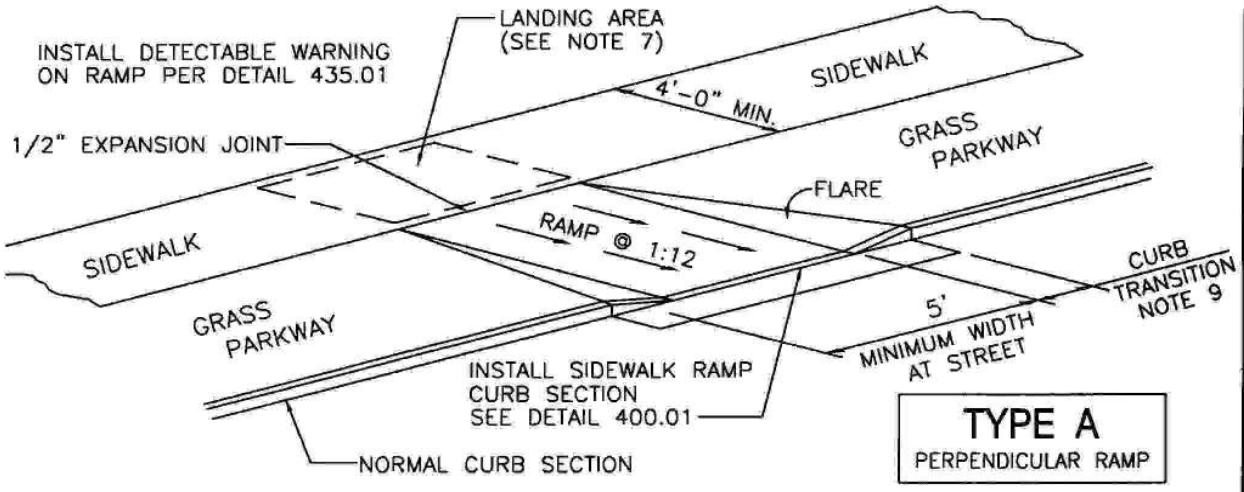

TYPE A
PERPENDICULAR RAMP

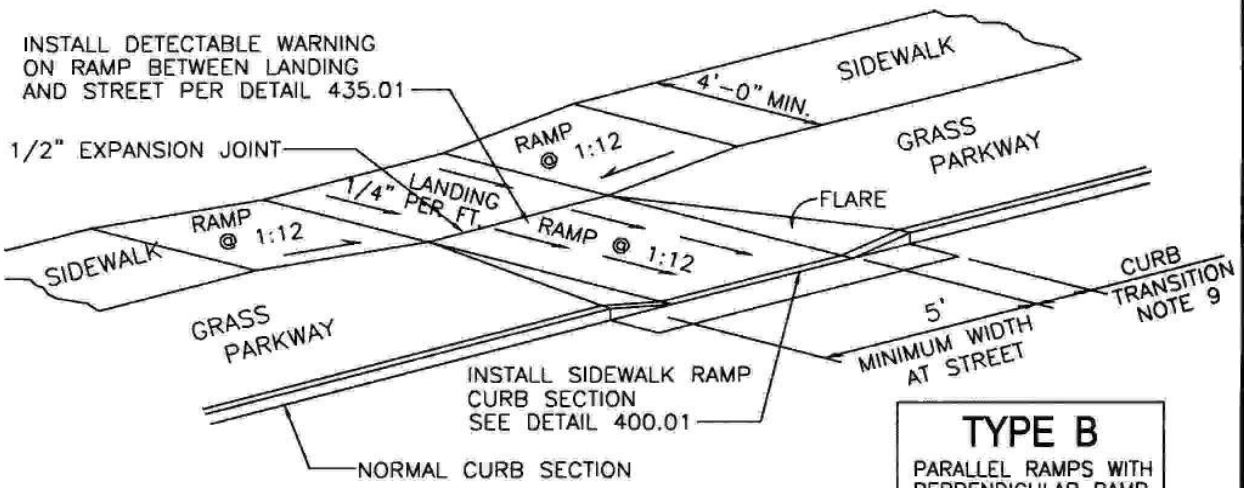

TYPE B
PARALLEL RAMPS WITH PERPENDICULAR RAMP

NOTE:

1. RAMP SHALL BE 4" THICK CLASS A CONCRETE.
2. EXPANSION JOINT SHALL BE 1/2" PREFORMED CORK OR BITUMINOUS EXPANSION JOINT MATERIAL.
3. ALL SLOPES ARE MEASURED FROM THE HORIZONTAL.
4. REPLACE STANDARD CURB SECTION WITH SIDEWALK RAMP CURB SECTION – DETAIL 400.01
5. RAMP LENGTH IS DEPENDENT ON 1:12 MAX. SLOPE. USE FLATTER WHEN POSSIBLE.
6. LANDING AREA AT TOP OF RAMP SHALL BE 4'-0" MIN WIDTH, CROSS SLOPE OF LANDING SHALL NOT EXCEED 1/4" PER FT.
7. TYPE "A" RAMP NOT APPLICABLE IF PARKWAY WIDTH DOES NOT PROVIDE ENOUGH LENGTH FOR PERPENDICULAR RAMP AT 1:12 SLOPE.
8. FLARES ARE REQUIRED AT RAMPS TO KEEP GRASS PARKWAY SLOPES IN CONFORMANCE WITH THE TYPICAL CROSS SECTION.
9. CURB TRANSITION LENGTH IS DEPENDENT ON FLARE SLOPE.

Approved 02/19/02 Date	COUNTY OF BOONE MISSOURI PUBLIC WORKS	**MIDBLOCK SIDEWALK RAMP** Sidewalk with Grass Parkway	**431.01**
Revisions		

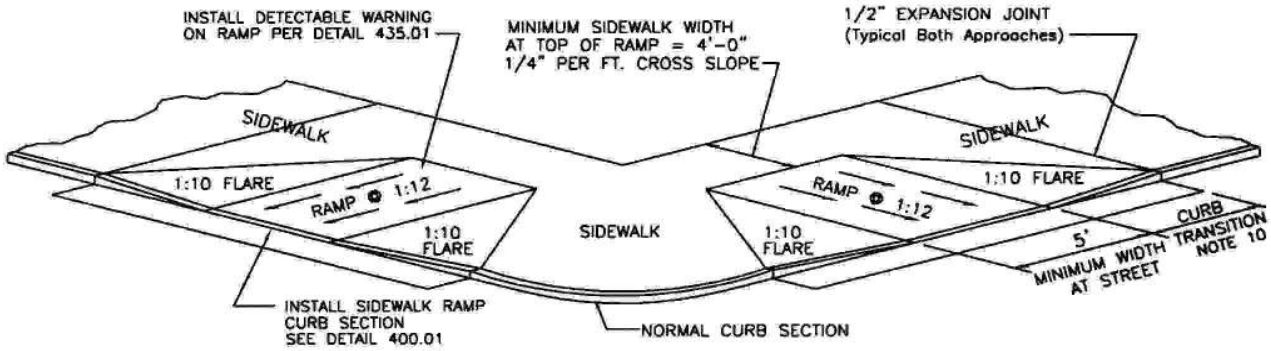

NOTE:

1. RAMP SHALL BE 4" THICK CLASS A CONCRETE.
2. EXPANSION JOINT SHALL BE 1/2" PREFORMED CORK OR BITUMINOUS EXPANSION JOINT MATERIAL.
3. MAXIMUM RAMP CROSS SLOPE IS 1/4" PER FT.
4. ALL SLOPES ARE MEASURED FROM THE HORIZONTAL.
5. REPLACE STANDARD CURB SECTION WITH SIDEWALK RAMP CURB SECTION – DETAIL 400.01
6. RAMP LENGTH IS DEPENDENT ON 1:12 MAX. SLOPE. USE FLATTER WHEN POSSIBLE.
7. LANDING AREA AT TOP OF RAMP SHALL BE 4'-0" MIN WIDTH, CROSS SLOPE OF LANDING SHALL NOT EXCEED 1/4" PER FT.
8. TYPE "A" RAMP NOT APPLICABLE IF SIDEWALK WIDTH DOES NOT PROVIDE 4'-0" LANDING AT THE TOP OF RAMP. USE TYPE "B" RAMP.
9. RAMP EXTENDS INTO SIDEWALK, FLARE SLOPE MUST NOT EXCEED 1:10.
10. CURB TRANSITION LENGTH IS DEPENDENT ON 1:10 FLARE SLOPE

Approved 02/19/02 Date	COUNTY OF BOONE MISSOURI PUBLIC WORKS	SIDEWALK RAMP Sidewalk at Back of Curb (Type A)	432.01
Revisions			

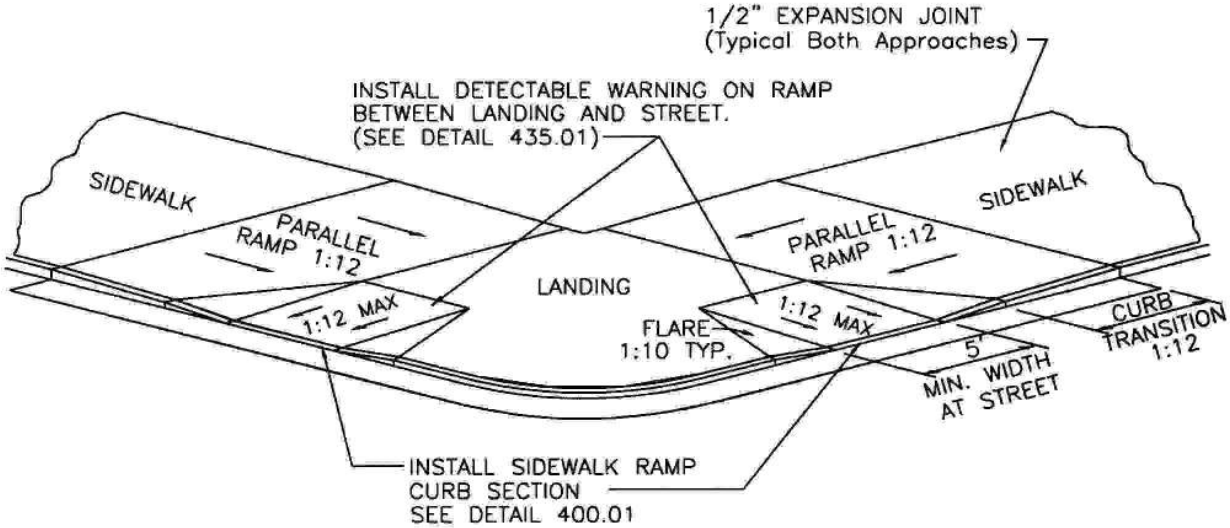

NOTE:

1. RAMP SHALL BE 4" THICK CLASS A CONCRETE.
2. EXPANSION JOINT SHALL BE 1/2" PREFORMED CORK OR BITUMINOUS EXPANSION JOINT MATERIAL.
3. MAXIMUM RAMP CROSS SLOPE IS 1/4" PER FT.
4. ALL SLOPES ARE MEASURED FROM THE HORIZONTAL.
5. REPLACE STANDARD CURB SECTION WITH SIDEWALK RAMP CURB SECTION – DETAIL 400.01
6. RAMP 1:12 MAX. USE FLATTER WHEN POSSIBLE.
7. LANDING AREA SHALL BE 4'–0" MIN WIDTH, CROSS SLOPE OF LANDING SHALL NOT EXCEED 1/4" PER FT.
8. TYPE "B" RAMP PROVIDES PARALLEL RAMPS TO REDUCE THE PERPENDICULAR RAMP LENGTH AND PROVIDE ADEQUATE LANDING.
9. RAMP EXTENDS INTO SIDEWALK, FLARE SLOPE MUST NOT EXCEED 1:10.

Approved 02/19/02 Date Revisions	COUNTY OF BOONE MISSOURI PUBLIC WORKS	SIDEWALK RAMP Sidewalk at Back of Curb (Type B)	432.02

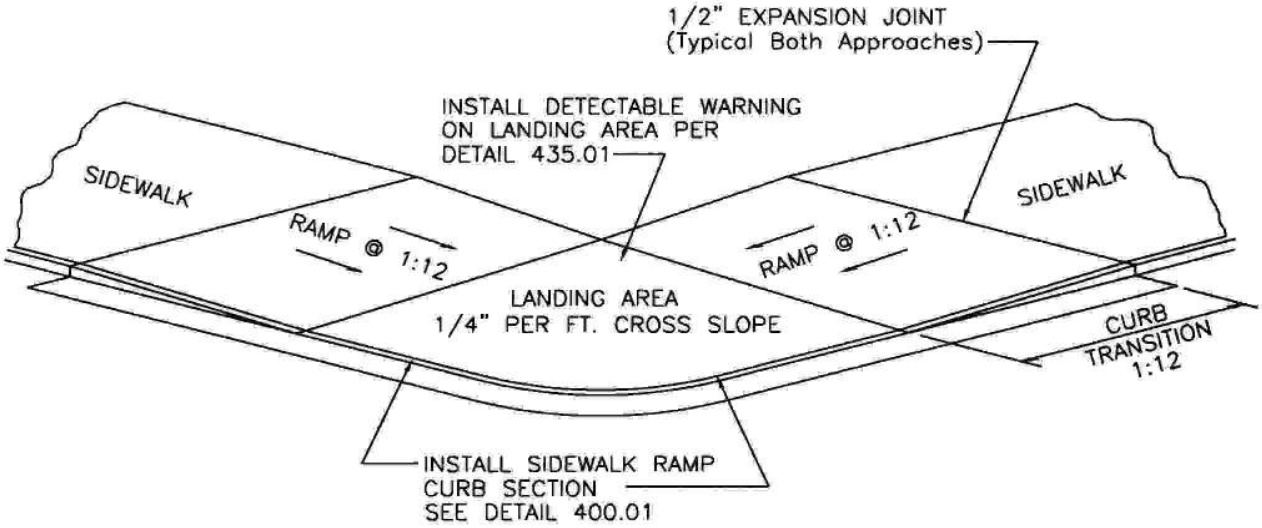

NOTE:

1. RAMP SHALL BE 4" THICK CLASS A CONCRETE.
2. EXPANSION JOINT SHALL BE 1/2" PREFORMED CORK OR BITUMINOUS EXPANSION JOINT MATERIAL.
3. MAXIMUM RAMP CROSS SLOPE IS 1/4" PER FT.
4. ALL SLOPES ARE MEASURED FROM THE HORIZONTAL.
5. REPLACE STANDARD CURB SECTION WITH SIDEWALK RAMP CURB SECTION – DETAIL 400.01
6. RAMP LENGTH IS DEPENDENT ON 1:12 MAX. SLOPE. USE FLATTER WHEN POSSIBLE.
7. LANDING AREA SHALL BE 4'-0" MIN WIDTH, CROSS SLOPE OF LANDING SHALL NOT EXCEED 1/4" PER FT.
8. USE TYPE "C" RAMP ONLY IF TYPE "A" & "B" ARE NOT FEASIBLE.

Approved 02/19/02 Date	COUNTY OF BOONE MISSOURI PUBLIC WORKS	SIDEWALK RAMP Sidewalk at Back of Curb (Type C)	432.03
Revisions			

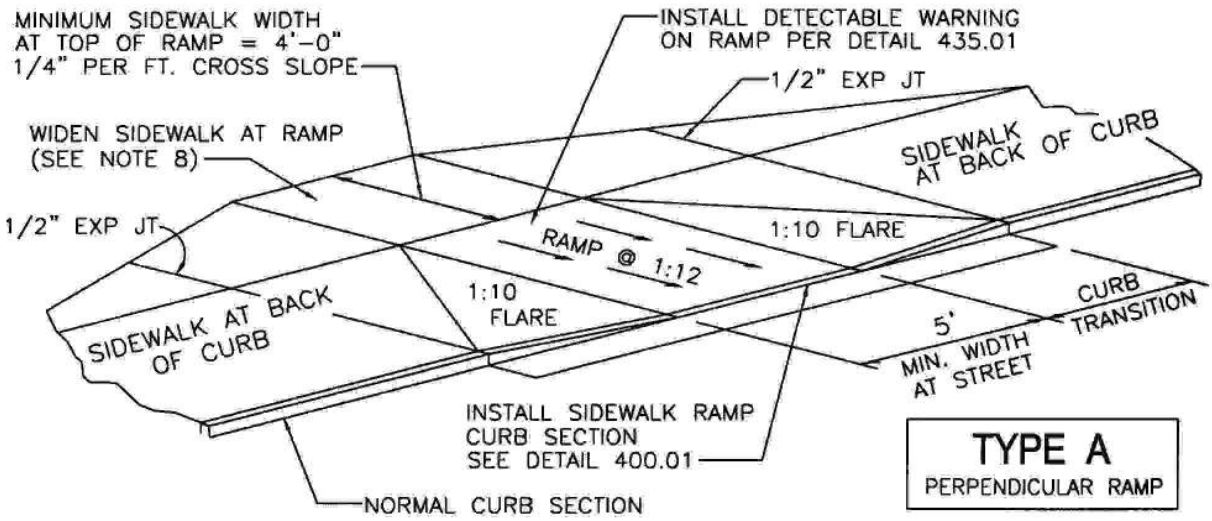

TYPE A
PERPENDICULAR RAMP

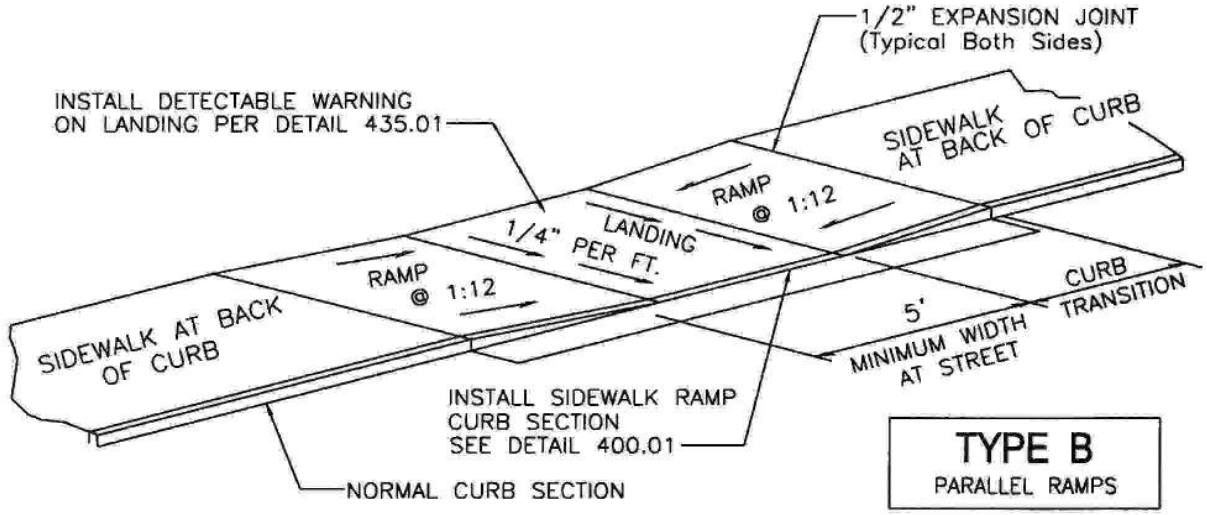

TYPE B
PARALLEL RAMPS

NOTE:

1. RAMP SHALL BE 4" THICK CLASS A CONCRETE.
2. EXPANSION JOINT SHALL BE 1/2" PREFORMED CORK OR BITUMINOUS EXPANSION JOINT MATERIAL.
3. MAXIMUM RAMP CROSS SLOPE IS 1/4" PER FT.
4. ALL SLOPES ARE MEASURED FROM THE HORIZONTAL.
5. REPLACE STANDARD CURB SECTION WITH SIDEWALK RAMP CURB SECTION – DETAIL 400.01
6. RAMP LENGTH IS DEPENDENT ON 1:12 MAX. SLOPE. USE FLATTER WHEN POSSIBLE.
7. LANDING AREA SHALL BE 4'-0" MIN WIDTH, CROSS SLOPE OF LANDING SHALL NOT EXCEED 1/4" PER FT.
8. TYPE "A" RAMP NOT APPLICABLE WHEN NORMAL SIDEWALK WIDTH DOES NOT PROVIDE 4'-0" LANDING AT THE TOP OF RAMP, WIDEN SIDEWALK OR USE TYPE "B" RAMP.
9. 10:1 FLARES ARE REQUIRED ON TYPE "A" RAMPS.

Approved 02/19/02 Date	COUNTY OF BOONE MISSOURI PUBLIC WORKS	**MIDBLOCK SIDEWALK RAMP** Sidewalk at Back of Curb	**433.01**
Revisions		

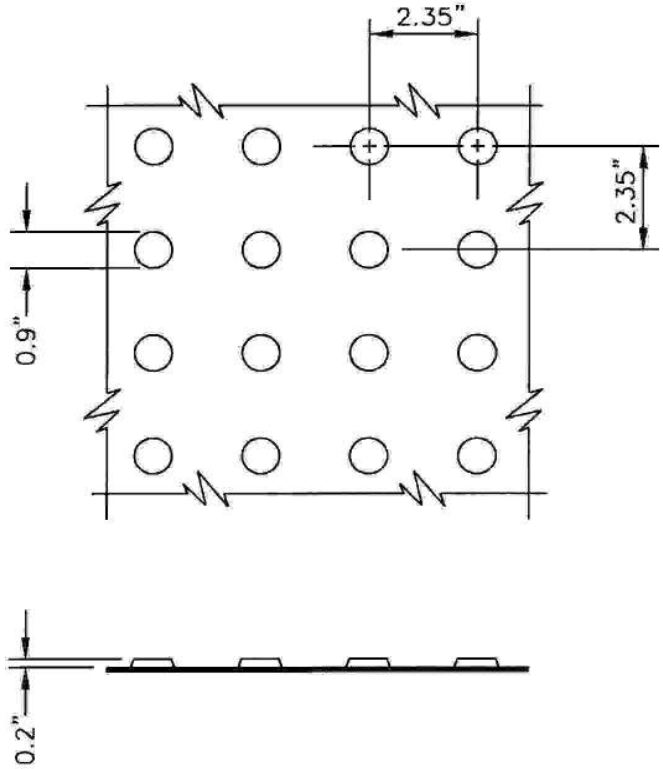

NOTE: DETECTABLE WARNING SHALL CONSIST OF OF RAISED TRUNCATED DOMES WITH A DIAMETER OF 0.9", A HEIGHT OF NOMINAL 0.2", AND A CENTER-TO-CENTER SPACING OF NOMINAL 2.35". AND SHALL CONTRAST VISUALLY WITH ADJOINING SURFACES, ACHIEVED BY THE ADDITION OF A RED PIGMENT TO THE CONCRETE MIX. DOME PATTERN SHALL BE STAMPED INTO THE WET CONCRETE AND SHALL BE AND INTEGRAL PART OF THE WALKING SURFACE.

Approved 02/19/02 Date	COUNTY OF BOONE MISSOURI PUBLIC WORKS	DETECTABLE WARNING	435.01
Revisions			

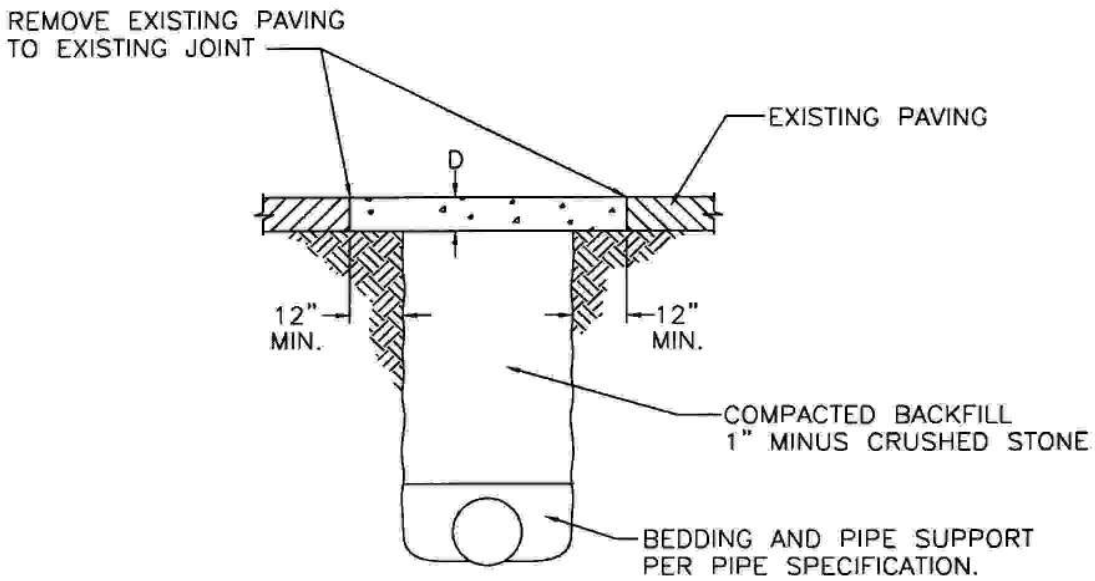

NOTE:

D = 4" PORTLAND CEMENT CONCRETE FOR SIDEWALKS
D = 6" PORTLAND CEMENT CONCRETE FOR RESIDENTIAL DRIVEWAYS
D = 7" PORTLAND CEMENT CONCRETE FOR COMMERCIAL DRIVEWAYS

Approved 02/19/02 Date Revisions	COUNTY OF BOONE MISSOURI PUBLIC WORKS	PATCHING & BACKFILLING (Driveways / Sidewalks)	440.01

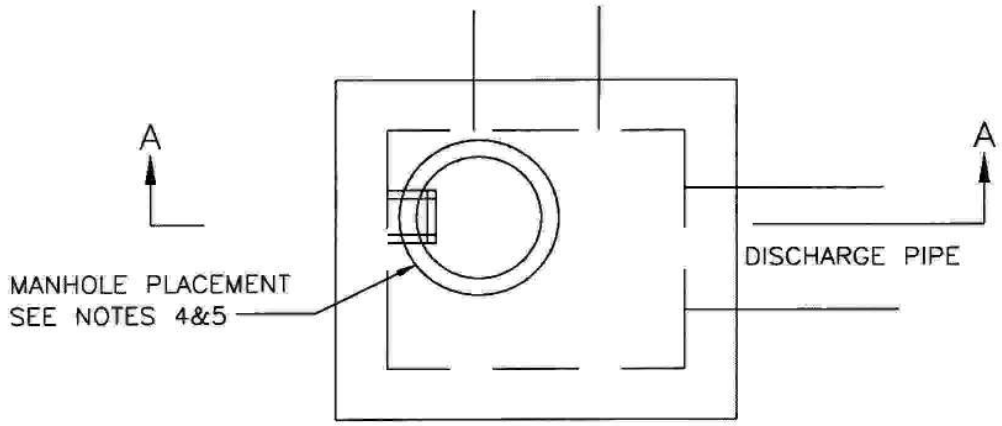

PLAN VIEW

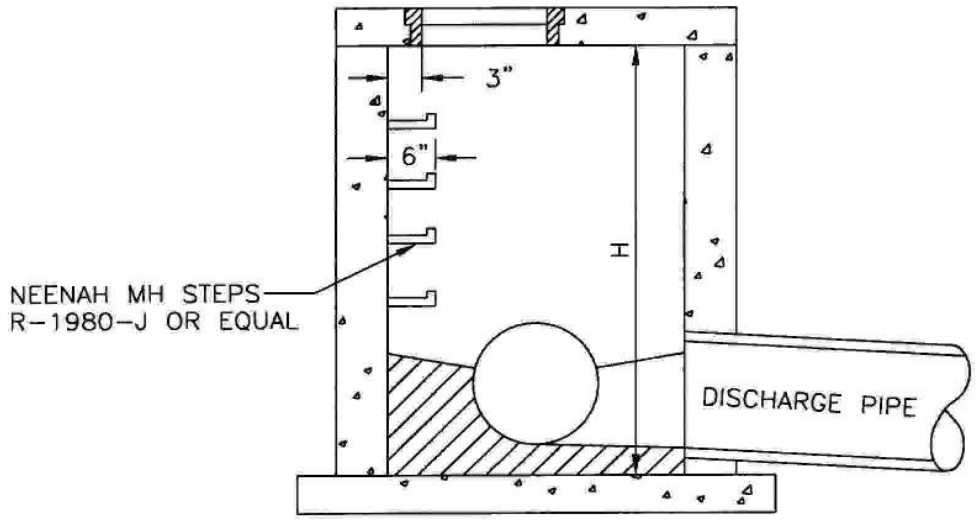

SECTION A-A

NOTES:

1. STEPS NOT REQUIRED WHERE H IS LESS THAN 4'.
2. CAST IRON STEPS STEPS SHALL BE NEENAH R-1980-J OR EQUAL
3. STEPS SHALL BE PLACED ON VACANT WALL WHEN POSSIBLE
4. MANHOLE RING SHALL BE OFFSET TOWARD WALL WITH STEPS.
5. MANHOLE RING SHALL BE CENTERED ON CENTERLINE OF STEPS
6. STAGGER STEPS 2" EACH WAY FROM CENTERLINE OF MANHOLE RING.
7. TOP STEP 24" BELOW TOP OF SLAB
8. STEP SPACING TO BE 16", BOTTOM STEP TO BE NO HIGHER THAN 16" FROM INVERT.

Approved 02/19/02 Date	COUNTY OF BOONE MISSOURI PUBLIC WORKS	DRAINAGE STRUCTURE STEPS	500.01
Revisions			

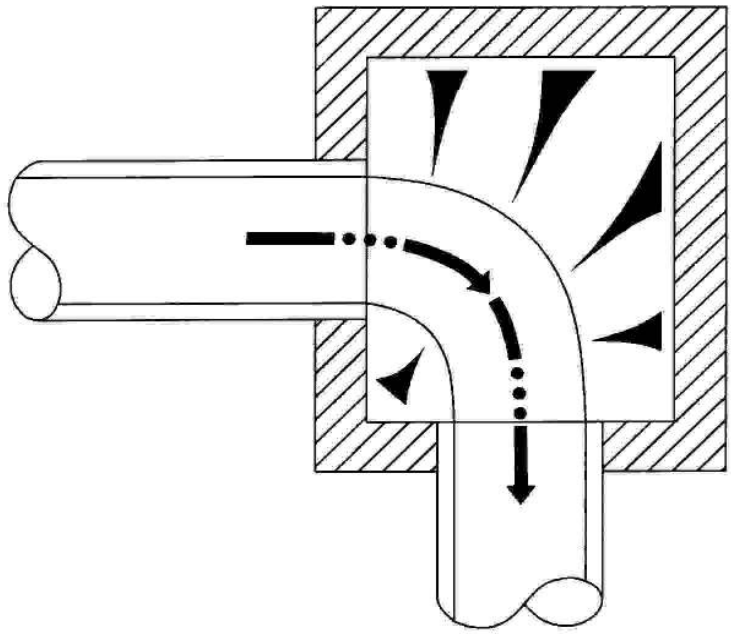

PLAN

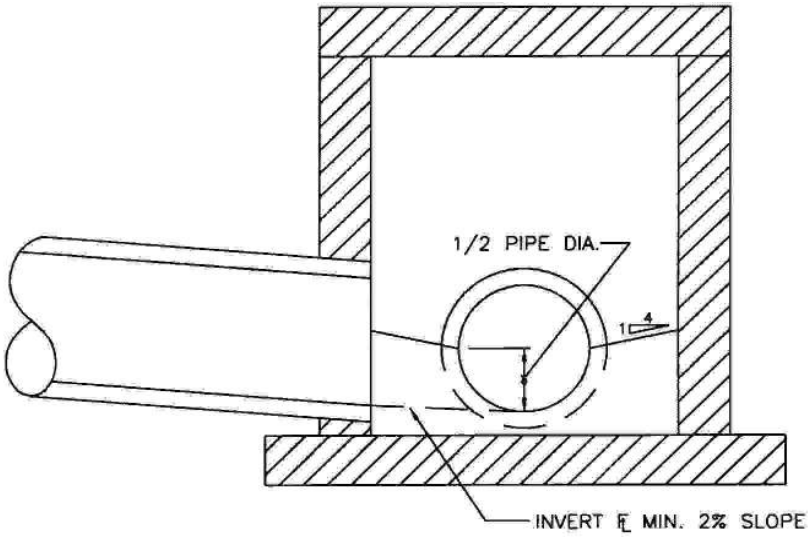

SECTION

NOTES:

1. FORM ALL INVERTS FOR SMOOTH FLOW THRU STRUCTURE.
2. INVERT SHALL BE FORMED UP TO 1/2 THE PIPE DIAMETER.
3. INVERT SHALL BE CLASS E CONCRETE.

DWM Approved	02/19/02 Date	COUNTY OF BOONE MISSOURI PUBLIC WORKS	DRAINAGE STRUCTURE INVERT	500.02
Revisions				

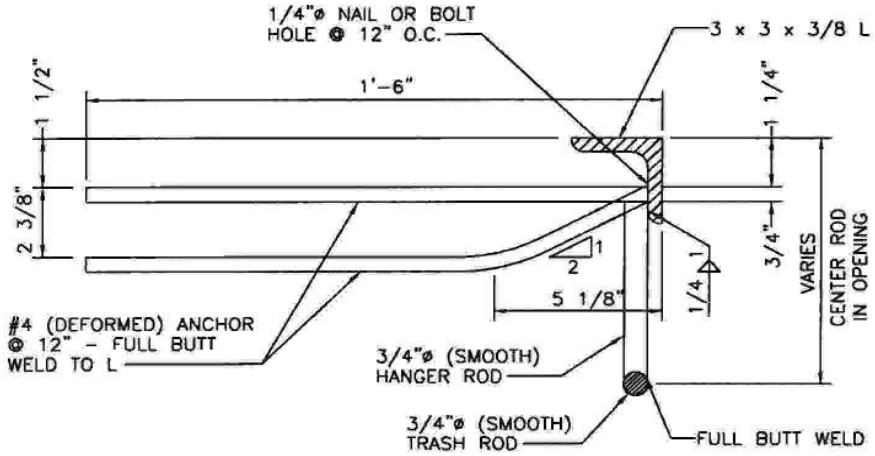

SECTION

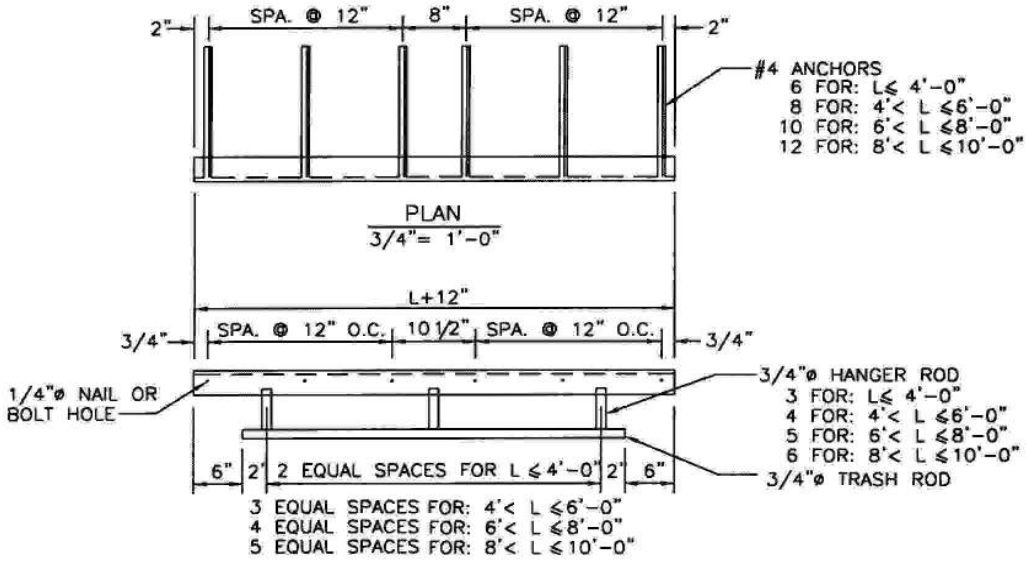

FRONT ELEV.

NOTES:

1. STRUCTURAL STEEL SHALL BE GRADE A-36
2. EXPOSED STEEL SURFACES TO BE FINISHED SMOOTH.
3. HOT DIP GALVANIZE ASSEMBLY, EXCEPT THAT GALV. NOT REQUIRED ON DEFORMED ANCHORS. CHIPPING NOT REQUIRED ON ANCHOR WELDS.
4. NAILS OR BOLTS USED TO ANCHOR ANGLE ASSEMBLY TO FORM SHALL BE REMOVED OR CUT OFF FLUSH WITH SURFACE OF ANGLE.
5. DIMENSION "L" REPRESENTS THE INSIDE INLET DIMENSION.

Approved 02/19/02 Date	COUNTY OF BOONE MISSOURI PUBLIC WORKS	INLET OPENING TRASH RACK	500.03
Revisions			

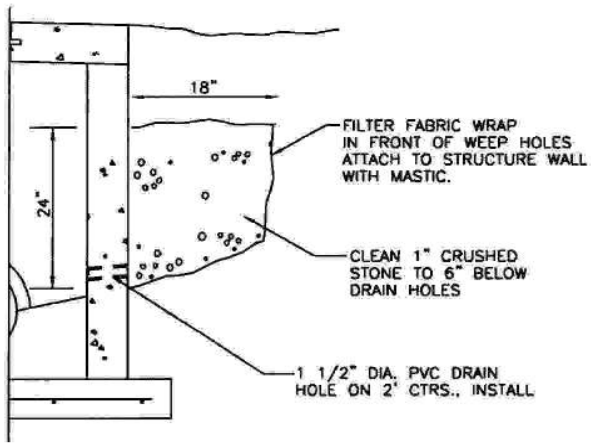

PARTIAL SECTION

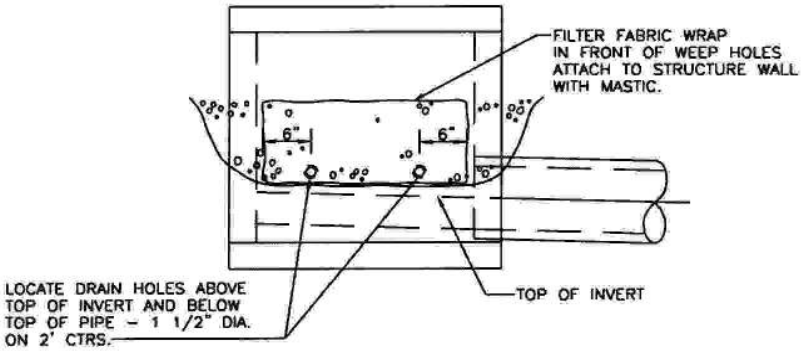

FRONT ELEVATION

NOTE:

1. PLACE WEEP HOLES ON UPSTREAM FACE OF ALL STRUCTURES AND ALSO ON ROADWAY FACE OF CURB INLET STRUCTURES.
2. WEEP HOLE FILTER FABRIC SHALL CONSIST OF A NON–WOVEN, POLYPROPYLENE TYPE FABRIC SUCH AS: AMOCO 4553 NON–WOVEN GEOTEXTILE FABRIC OR APPROVED EQUAL.

DWM Approved	02/19/02 Date	COUNTY OF BOONE MISSOURI PUBLIC WORKS	DRAINAGE STRUCTURE WEEP HOLES	500.04
Revisions				

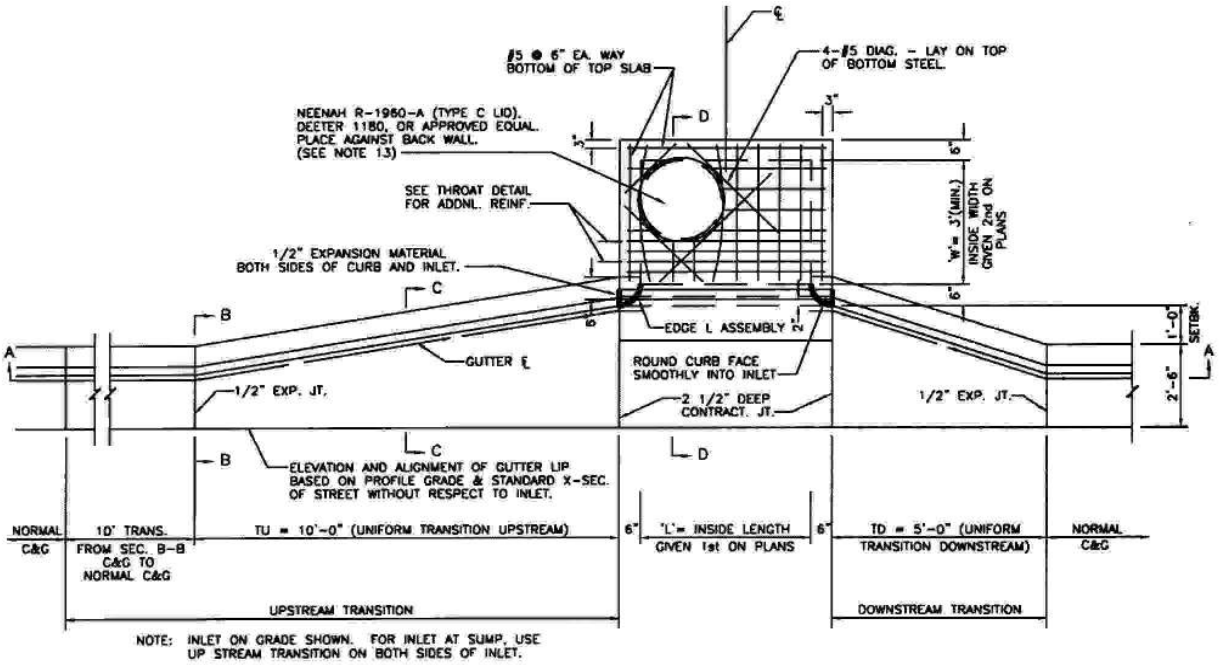

PLAN

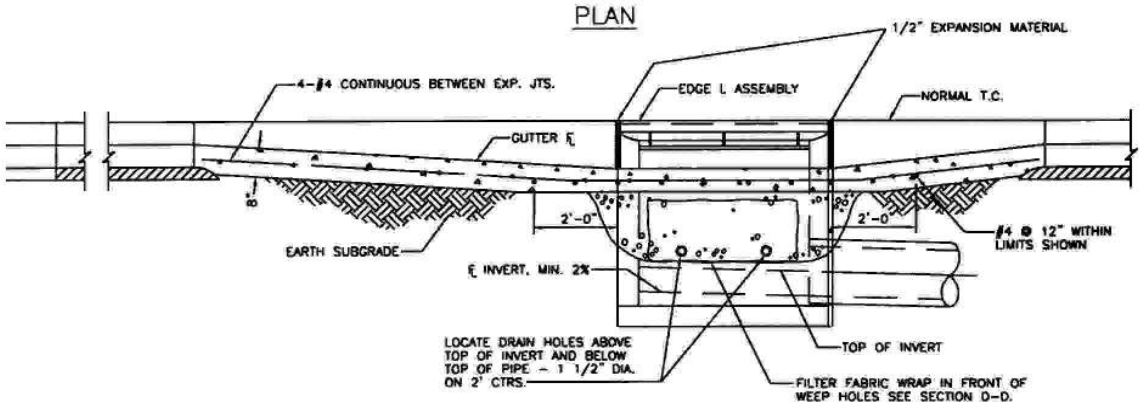

SECTION A-A

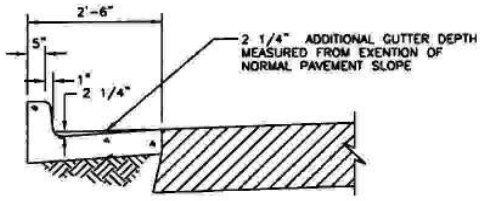

SECTION B-B

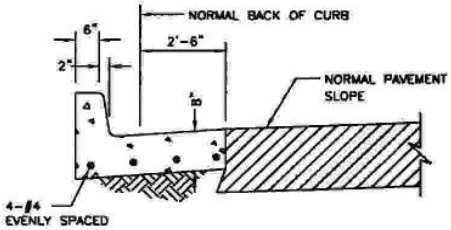

SECTION C-C

DWM Approved 02/19/02 Date Revisions	COUNTY OF BOONE MISSOURI PUBLIC WORKS	TYPE M INLET (Plan & Sections)	505.01A

TYPE M INLET NOTES

1. CONCRETE SHALL BE: CLASS E FOR BASE, CLASS D FOR WALLS AND TOP.
2. REINFORCING STEEL SHALL BE GRADE 60
3. THIS DESIGN IS FOR L = 4'-0", 6'-0", 8'-0", OR 10'-0".
4. INLET WILL BE CALLED OUT ON PLANS AS 'L'x'W' STD. CURB INLET, OR 'L'x'W' DEFLECTOR CURB INLET. DIMENSIONS 'L'&'W' GIVEN ON PLANS AS 'L'x'W'.
5. STA AND OFFSET OR COORDINATES SHOWN ON PLAN ARE GIVEN TO CENTER OF INLET WALLS.
6. THE ELEVATION OF THE TOP OF INLET GIVEN ON THE PLAN SHEET IS AT THE CENTER OF THE FRONT EDGE OF THE EDGE ANGLE ASSEMBLY. SLOPE THE TOP TO MATCH STREET GRADE, AND CROSS SLOPE OF RIGHT OF WAY.
7. DIMENSIONS TU AND TD AS SHOWN EXCEPT WHERE NOTED OTHERWISE IN PLANS.
8. TRANSITIONS ALONG LENGTH TU & TD MUST BE UNIFORM BETWEEN STANDARD CURB & GUTTER CROSS SECTION & THAT SHOWN AT INLET. FORM CURB FACE WITH FLEXIBLE FORM.
9. REINFORCEMENT:
   (A) BEND AROUND MH RING WHEREVER FEASIBLE. (SEE PLAN)
   (B) MINIMUM 2" COVER REQUIRED UNLESS NOTED OTHERWISE.
10. BROOM FINISH TOP SLAB.
11. HORIZONTAL PROJECTION OF PIPE CENTERLINE SHALL INTERSECT AT THE CENTER OF INLET, UNLESS OTHERWISE SHOWN.
12. TRIM PIPE FLUSH WITH INSIDE WALLS.
13. CAST IRON STEPS, FRAME, AND LID:
    STEPS NOT REQUIRED WHERE H IS LESS THAN 4'.
    CAST IRON STEPS SHALL BE NEENAH R-1980-J OR EQUAL
    STEPS SHALL BE PLACED ON VACANT WALL WHEN POSSIBLE
    MANHOLE RING SHALL BE OFFSET TOWARD WALL WITH STEPS.
    MANHOLE RING SHALL BE CENTERED ON CENTERLINE OF STEPS
    STAGGER STEPS 2" EACH WAY FROM CENTERLINE OF MANHOLE RING.
    TOP STEP 24" BELOW TOP OF SLAB
    STEP SPACING TO BE 16", BOTTOM STEP TO BE NO HIGHER THAN 16" FROM INVERT.
14. CLASS E CONCRETE INVERT SHALL BE FORMED UP TO 1/2 THE PIPE DIAMETER.
15. WEEP HOLE FILTER FABRIC SHALL CONSIST OF A NON-WOVEN, POLYPROPYLENE TYPE FABRIC SUCH AS AMOCO 4553 NON-WOVEN GEOTEXTILE FABRIC OR APPROVED EQUAL.
16. 1/2" EXPANSION MATERIAL TO BE PLACED BETWEEN THROAT AND INLET AS WELL AS CURB AND INLET.
17. TWO (2) LAYERS OF TAR PAPER SHALL BE PLACED BETWEEN THROAT POUR AND INLET WALL TO ALLOW MOVEMENT.

DWM 02/19/02 Approved Date	COUNTY OF BOONE MISSOURI PUBLIC WORKS	TYPE M INLET NOTES	505.01B
Revisions			

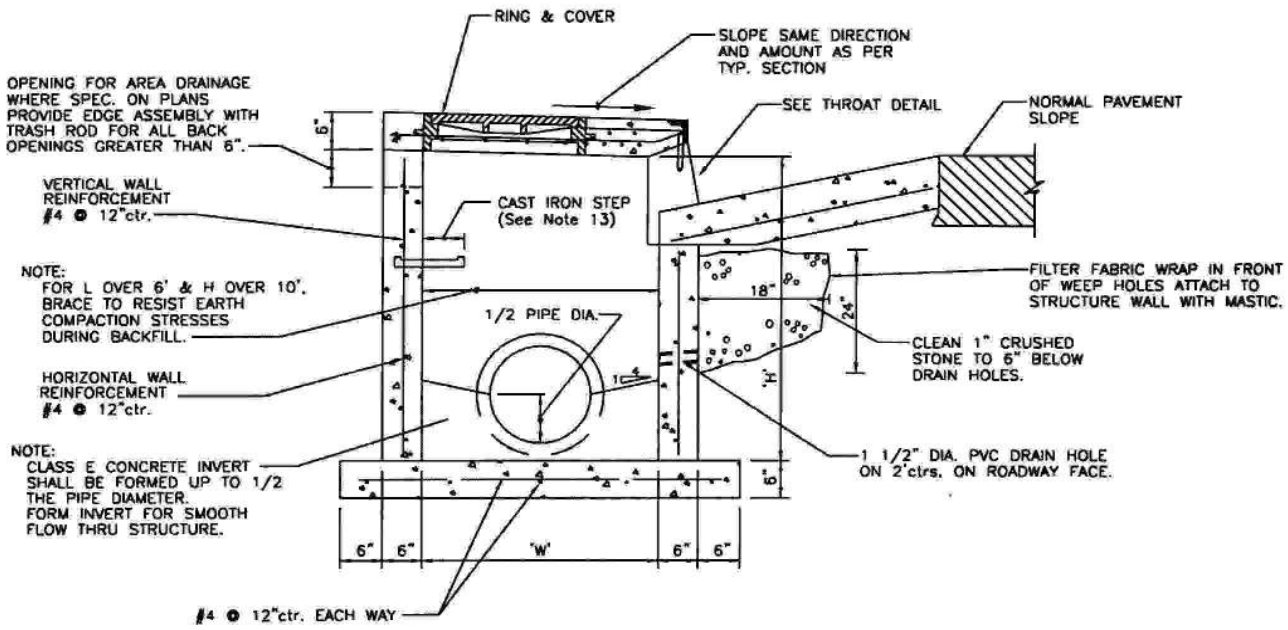

SECTION D–D

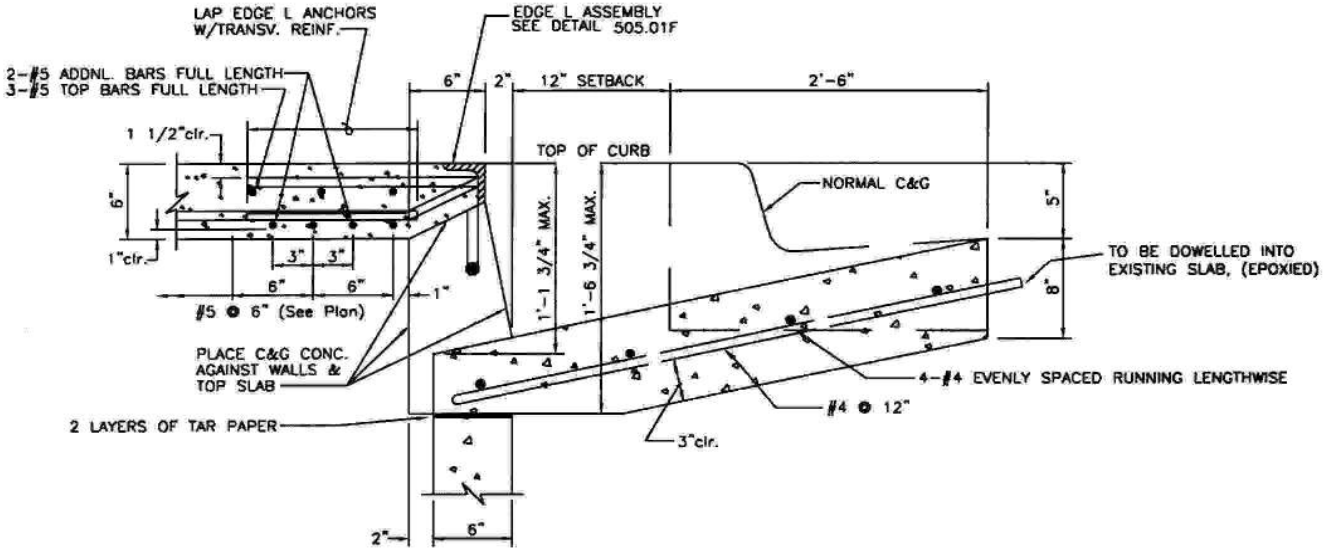

THROAT DETAIL

NOTE:

1/2" EXPANSION MATERIAL TO BE PLACED BETWEEN THROAT AND INLET, AND CURB AND INLET.

DWM Approved	02/19/02 Date	COUNTY OF BOONE MISSOURI PUBLIC WORKS	TYPE M INLET SECTION AND DETAIL	505.01C
Revisions				

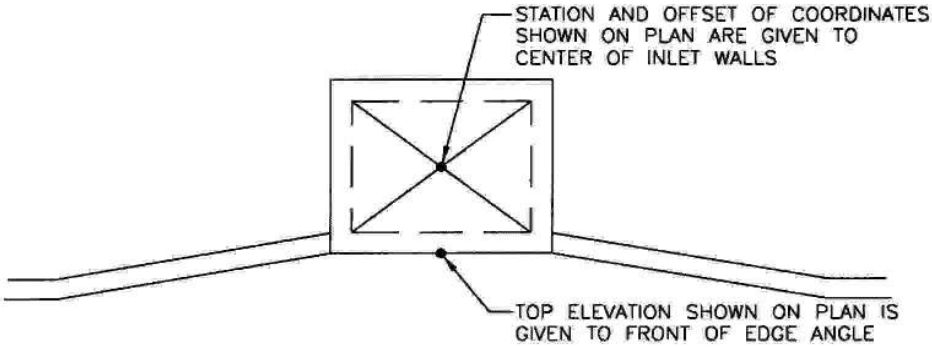

INLET PLAN INFORMATION

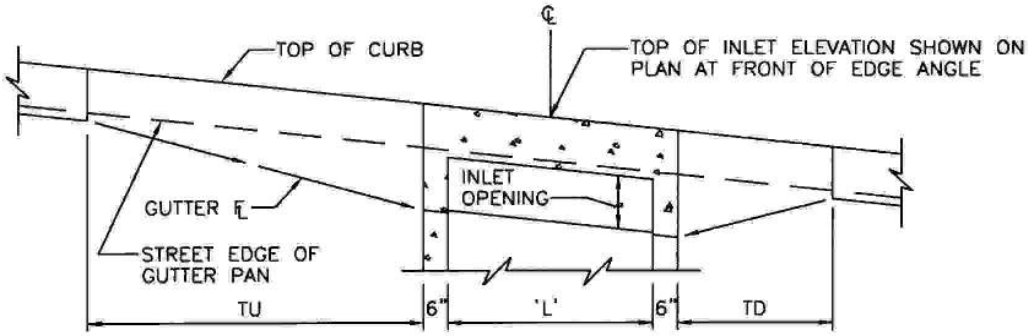

ON SLOPE

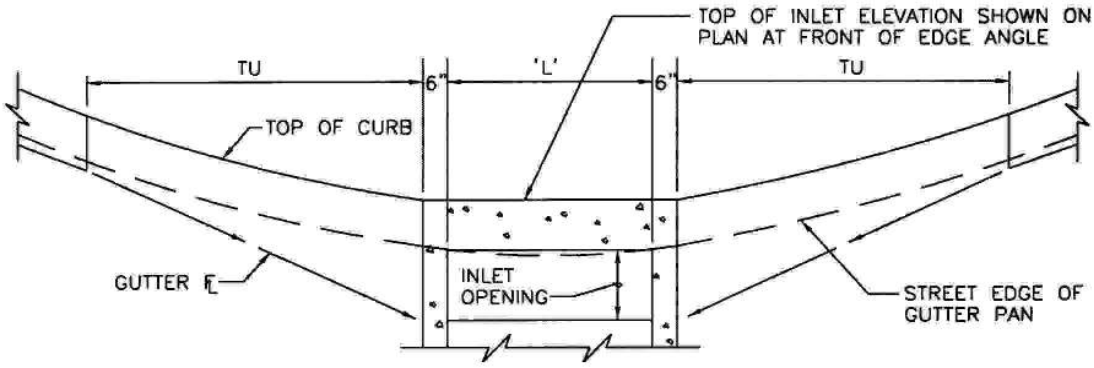

AT LOW POINT

INLET SETTING DIAGRAMS

DWM Approved 02/19/02 Date	COUNTY OF BOONE MISSOURI PUBLIC WORKS	TYPE M INLET SETTING DIAGRAM	505.01D
Revisions			

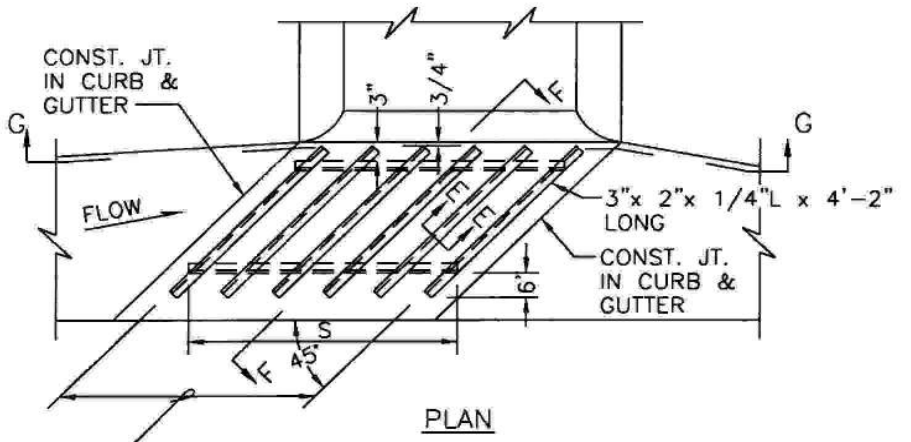

PLAN

DEFLECTORS TO BE EQUALLY SPACED

- FOR L=4'; 6 DEFLECTORS-S=4'-6"
- FOR L=6'; 8 DEFLECTORS-S=6'-6"
- FOR L=8'; 11 DEFLECTORS-S=8'-6"
- FOR L=10'; 13 DEFLECTORS-S=10'-6"

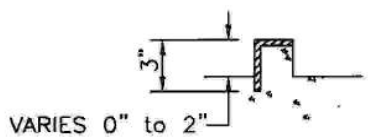

SECTION E-E

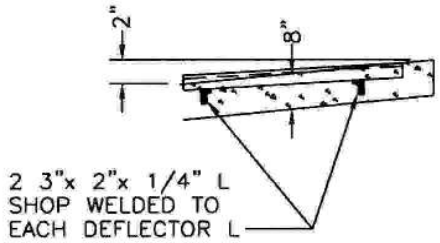

SECTION F-F

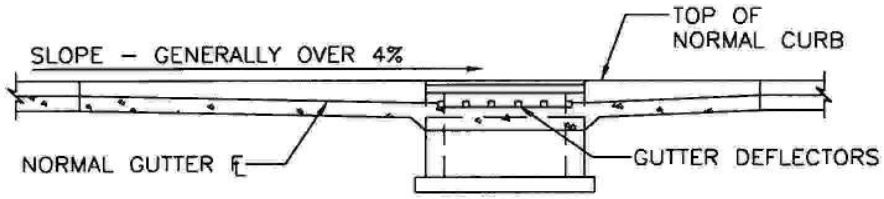

SECTION G-G

GUTTER DEFLECTOR NOTES:

1. ASSEMBLY TO BE HOT DIP GALVANIZED.
2. TO BE USED WHERE DEFLECTOR CURB INLET IS SPECIFIED
3. BEFORE PLACING CONCRETE; SUPPORT UNIT SECURELY IN FINAL POSITION BY ATTACHING TO METAL RODS DRIVEN INTO SUBGRADE
4. TO BE USED WHEN GRADE IS 4% OR GREATER.

DWM Approved	02/19/02 Date	COUNTY OF BOONE MISSOURI PUBLIC WORKS	TYPE M INLET DEFLECTOR DETAIL	505.01E
Revisions				

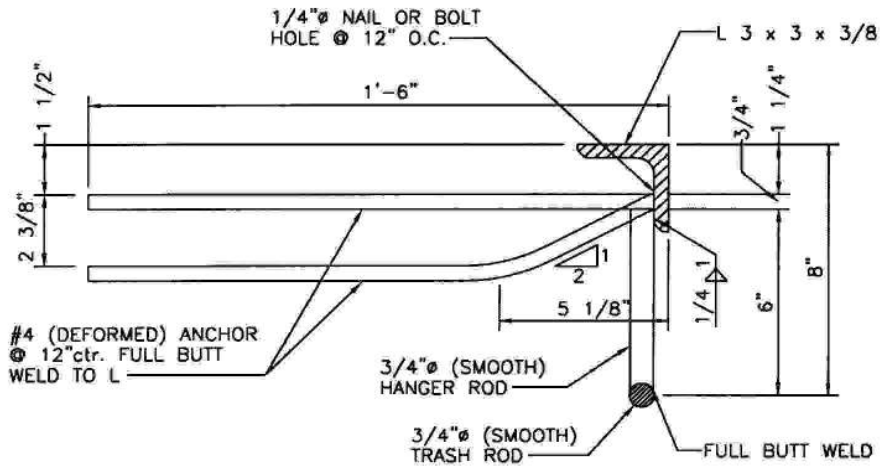

SECTION

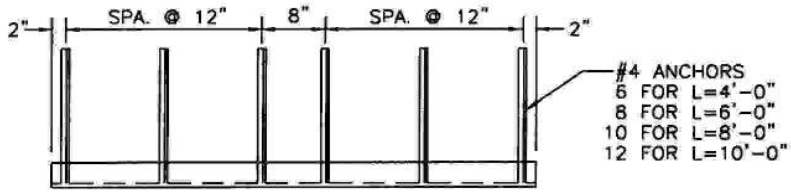

PLAN

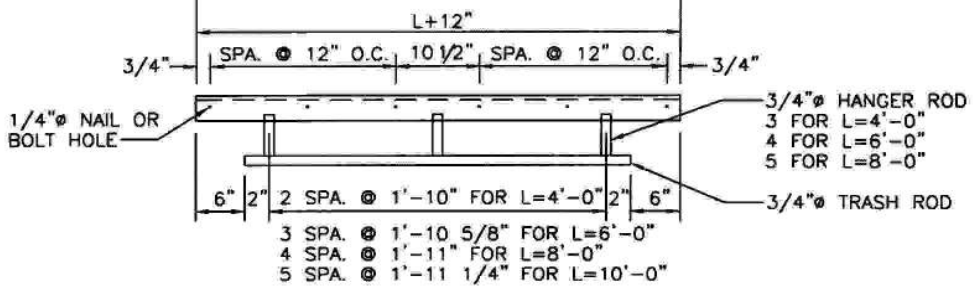

FRONT ELEV.

NOTES:

1. STRUCTURAL STEEL SHALL BE GRADE A-36
2. EXPOSED STEEL SURFACES TO BE FINISHED SMOOTH.
3. HOT DIP GALVANIZE ASSEMBLY, EXCEPT THAT GALV. NOT REQUIRED ON DEFORMED ANCHORS. CHIPPING NOT REQUIRED ON ANCHOR WELDS.
4. NAILS OR BOLTS USED TO ANCHOR ANGLE ASSEMBLY TO FORM SHALL BE REMOVED OR CUT OFF FLUSH WITH SURFACE OF ANGLE.
5. DIMENSION "L" REPRESENTS THE INSIDE INLET DIMENSION.

DWM Approved	02/19/02 Date	COUNTY OF BOONE MISSOURI PUBLIC WORKS	TYPE M INLET EDGE ANGLE ASSEMBLY	505.01F
Revisions				

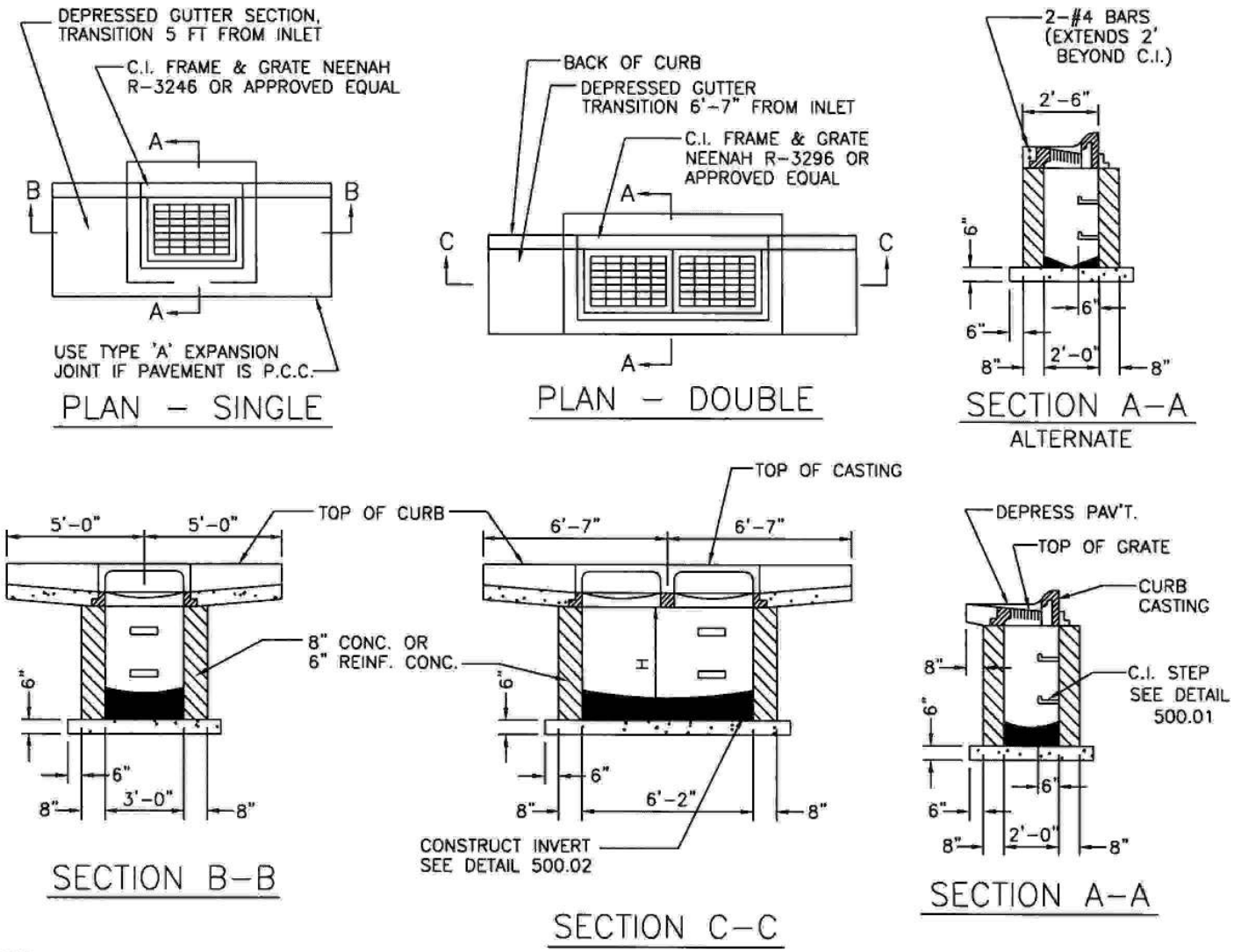

NOTES:

1. CONCRETE SHALL BE CLASS E FOR BASES AND D FOR WALLS AND TOP.
2. REINFORCING STEEL SHALL BE GRADE 60
3. INSTALL WEEP HOLES AS PER DETAIL 500.04
4. STRUCTURES WHERE H>8' SHALL BE REINFORCED CONCRETE (#4 BARS AT 12" CTRS, BOTH WAYS AND #4 BARS DIAGONAL AT PIPE OPENINGS)

Approved 02/19/02 Date

Revisions

PUBLIC WORKS

COUNTY OF BOONE MISSOURI

TYPE "A" INLET

505.02

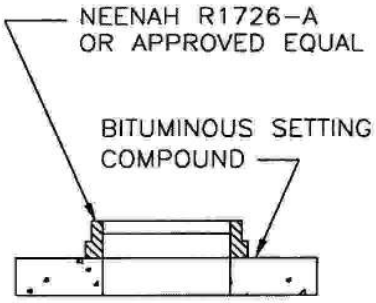

OPTIONAL TOP
(Use only when specified on plan)

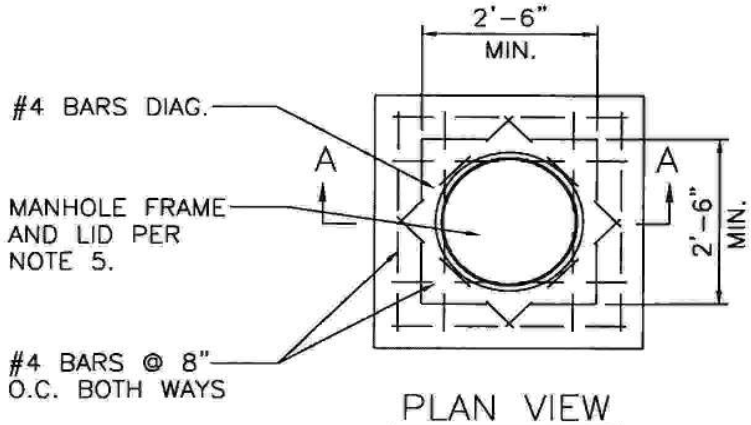

PLAN VIEW

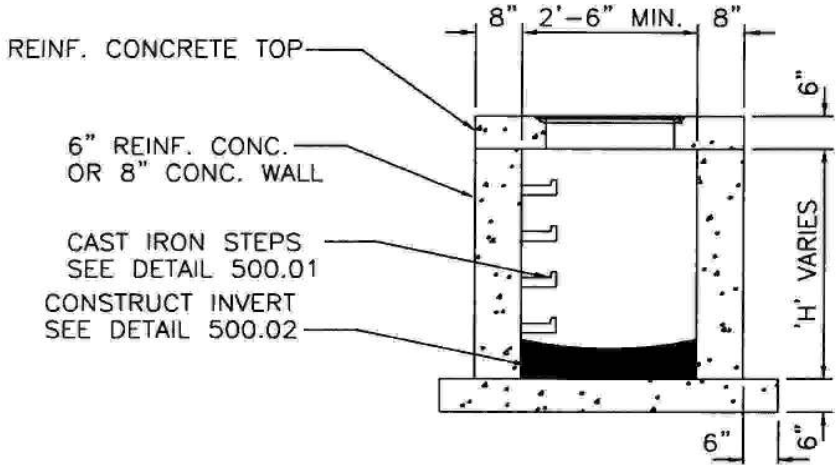

SECTION A-A
(Showing Standard Flush Top)

NOTES:

1. CONCRETE SHALL BE CLASS E FOR BASES AND D FOR WALLS AND TOP.
2. REINFORCING STEEL SHALL BE GRADE 60
3. INSTALL WEEP HOLES AS PER DETAIL 500.04
4. STRUCTURES WHERE H>8' SHALL BE REINFORCED CONCRETE (#4 BARS AT 12" CTRS, BOTH WAYS AND #4 BARS DIAGONAL AT PIPE OPENINGS)
5. FRAME AND LID SHALL BE NEENAH R-1960-A (TYPE C LID), DEETER 1180, OR APPROVED EQUAL. SEE DETAIL 500.01 FOR PLACEMENT.

DWM Approved	02/19/02 Date	COUNTY OF BOONE MISSOURI PUBLIC WORKS	JUNCTION BOX	510.01
Revisions				

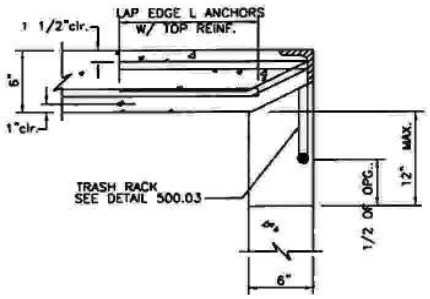

OPENINGS OVER 6"

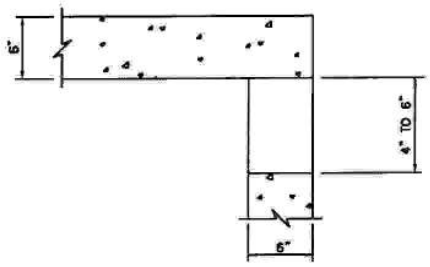

OPENINGS 4" TO 6"

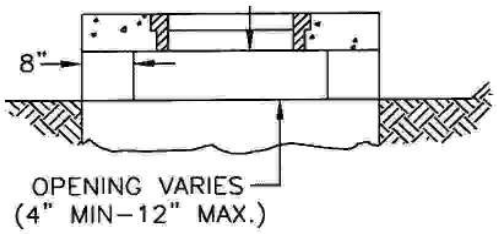

SIDE OPENING DETAIL

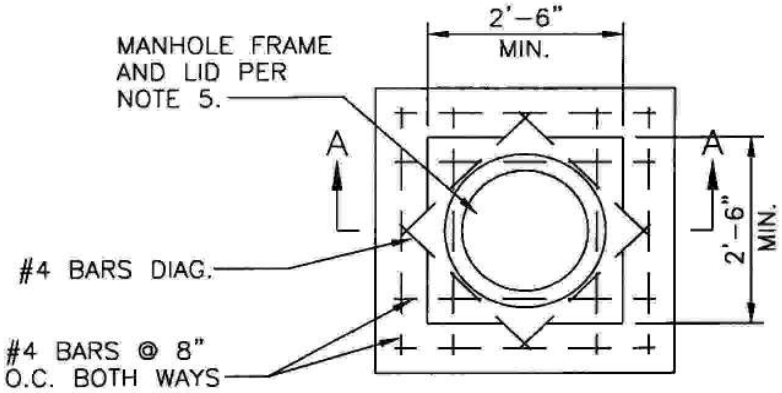

PLAN VIEW

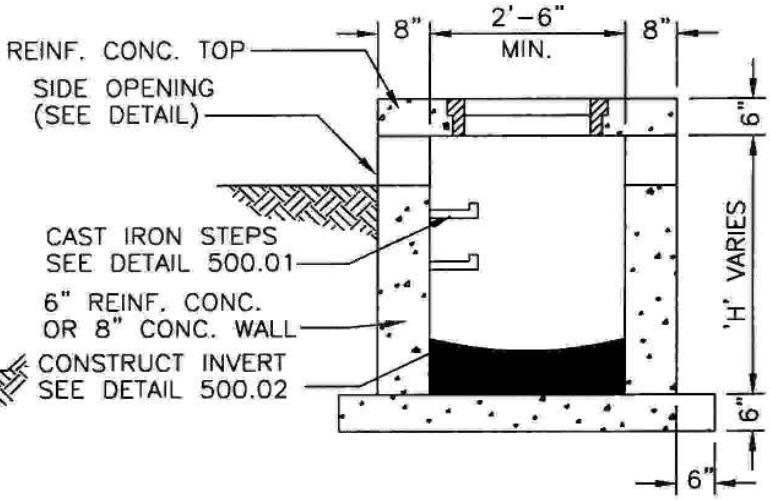

SECTION A–A

NOTES:

1. CONCRETE SHALL BE CLASS E FOR BASES AND D FOR WALLS AND TOP.
2. REINFORCING STEEL SHALL BE GRADE 60
3. INSTALL WEEP HOLES AS PER DETAIL 500.04
4. STRUCTURES WHERE H>8' SHALL BE REINFORCED CONCRETE (#4 BARS AT 12" CTRS, BOTH WAYS AND #4 BARS DIAGONAL AT PIPE OPENINGS)
5. FRAME AND LID SHALL BE NEENAH R–1960–A (TYPE C LID), DEETER 1180, OR APPROVED EQUAL. SEE DETAIL 500.01 FOR PLACEMENT.
6. SIDE OPENINGS TO BE ON ALL FOUR SIDES UNLESS NOTED OTHERWISE
7. INSTALL TRASH RACK ON OPENINGS OVER 6" SEE DETAIL 500.03

DWM Approved	02/19/02 Date	COUNTY OF BOONE MISSOURI PUBLIC WORKS	SIDE OPENING INLET	510.02
Revisions				

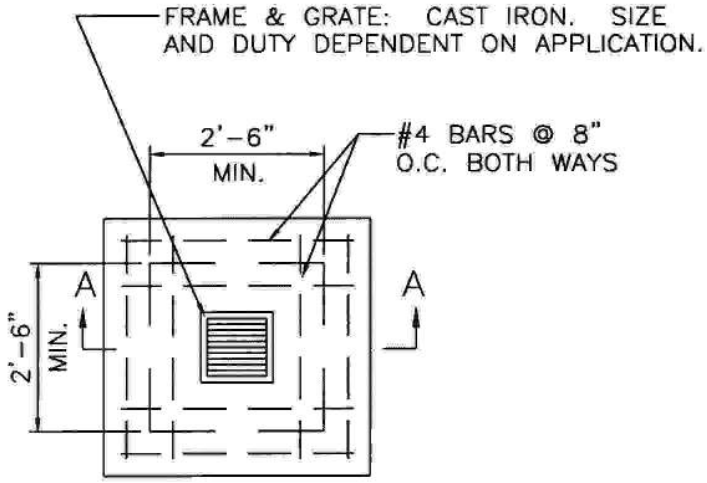

CATCH BASIN

PLAN VIEW

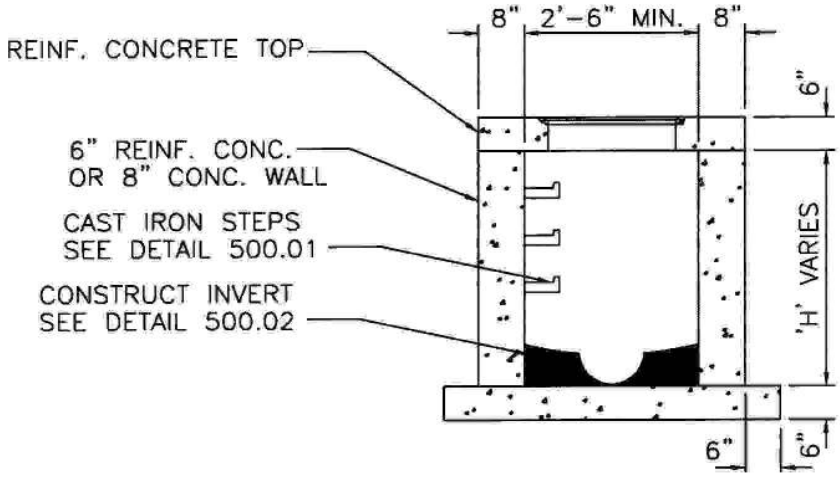

SECTION A–A

NOTES:

1. CONCRETE SHALL BE: CLASS E FOR BASES, CLASS D FOR WALLS AND TOP.
2. REINFORCING STEEL SHALL BE GRADE 60
3. INSTALL WEEP HOLES AS PER DETAIL 500.04
4. STRUCTURES WHERE H>8' SHALL BE REINFORCED CONCRETE (#4 BARS AT 12" CTRS, BOTH WAYS AND #4 BARS DIAGONAL AT PIPE OPENINGS)

Approved 02/19/02 Date	COUNTY OF BOONE MISSOURI PUBLIC WORKS	CATCH BASIN	510.03
Revisions			

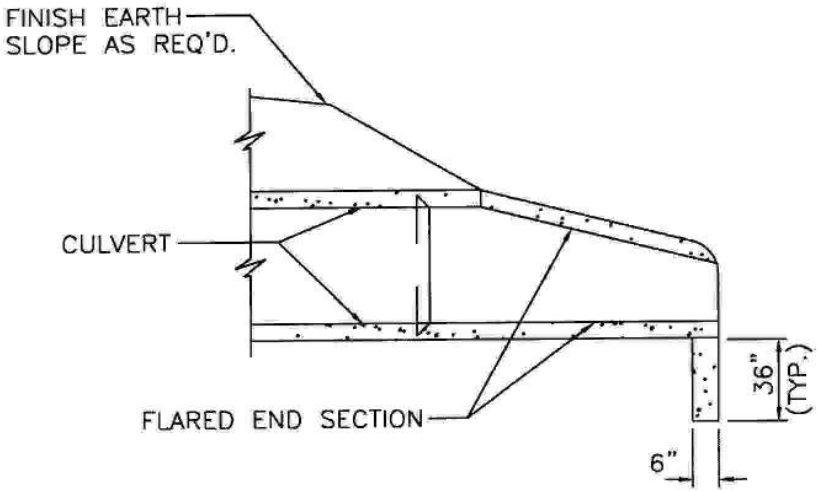

SECTION VIEW

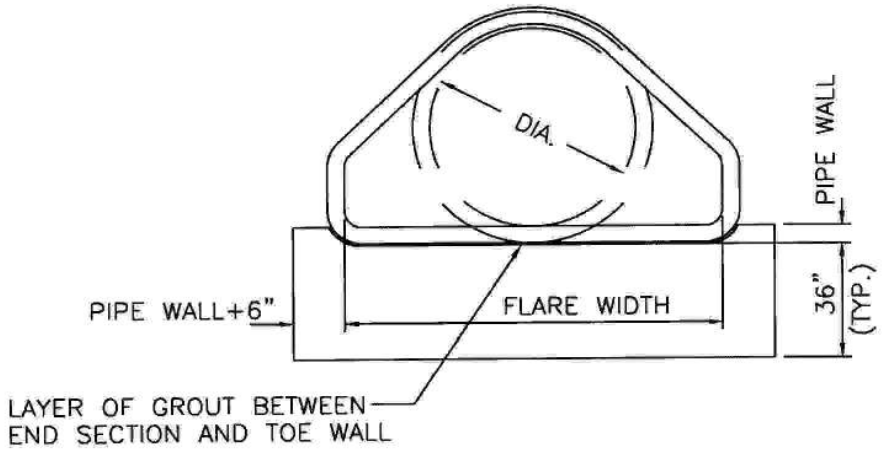

END VIEW

NOTE:
CONCRETE FOR TOE WALL SHALL BE CLASS E OR PRE-CAST EQUIVALENT.
THE USE OF PRE-CAST MUST BE PRE-APPROVED.

DWM Approved 02/19/02 Date	COUNTY OF BOONE MISSOURI PUBLIC WORKS	TOEWALL & END SECTION (FOR R.C.P.)	525.01
Revisions			

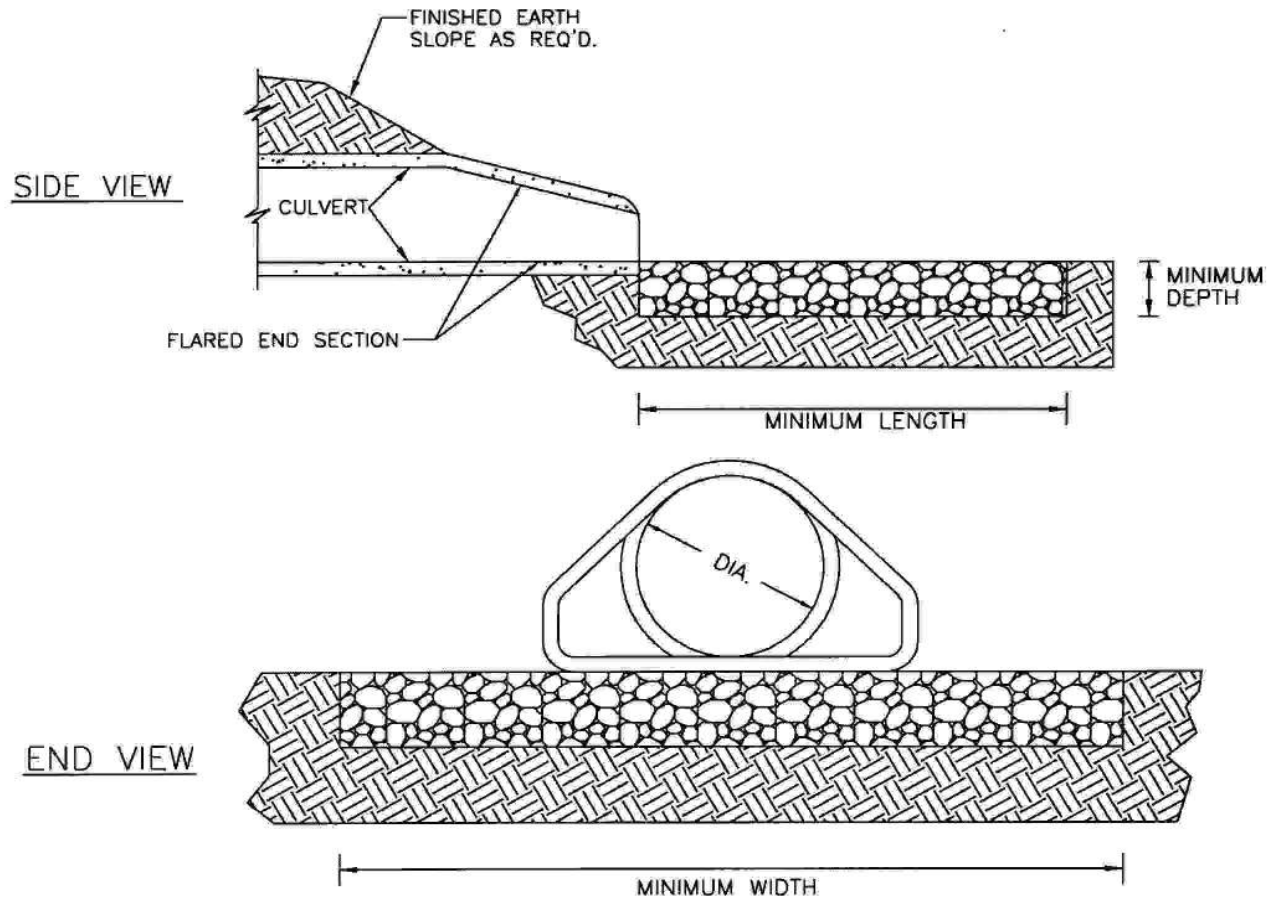

ROCK LINING FOR CULVERT OUTLETS					
CULVERT DIAM. INCHES	MINIMUM DEPTH AND WIDTH FEET	MINIMUM LENGTH FEET	ROCK LINING CU. YDS.	EQUIVALENT PIPE ARCH CULVERT (APPROX)	EQUIVALENT CONC. BOX CULVERT (APPROX) FEET
18	1 X 4	12	2		
24	1 X 6	14	3		2 X 1 1/2
30	1 X 7	16	4	8 – 5	2 X 2
36	1.5 X 9	18	9	8 – 6	3 X 2
42	2 X 10	20	15	8 – 7	3 X 3
48	2 X 12	20	18	8 – 8	4 X 3
54	2 X 13.5	22	22	8 – 9	4 X 4
60	2 X 15	25	28	8 – 10	5 X 4
66	2 X 18	25	33	8 – 11	5 X 5
72	2 X 20	30	44	8 – 12	5 X 6
84	2.5 X 25	35	81		6 X 6
96	2.5 X 30	40	111		7 X 7
108	3 X 32	40	142		8 X 8

DWM
Approved
02/19/02
Date
Revisions

COUNTY OF BOONE MISSOURI
PUBLIC WORKS

ROCK LINING FOR CULVERT OUTLETS

525.02

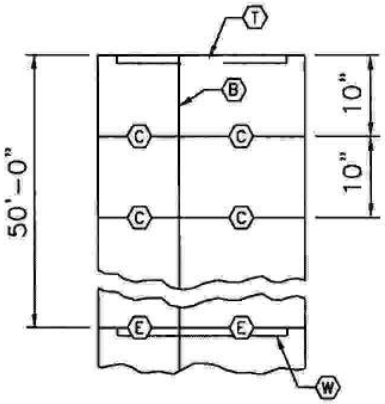

PLAN VIEW

LEGEND

- (C) SAW JOINT, FILL WITH BITUMASTIC JOINT SEALANT – SEE DETAIL.
- (E) 1/2" EXPANSION JOINT AT 50' INTERVALS.
- (T) TOE WALL TO BE CONSTRUCTED AT OUTLET END OF PAVED DITCHES.
- (B) KEY JOINT (SEE DETAIL)
- (W) CUT-OFF WALL @ 50'-0" SPA.

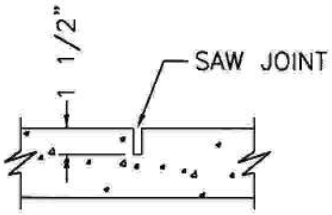

C JOINT DETAIL

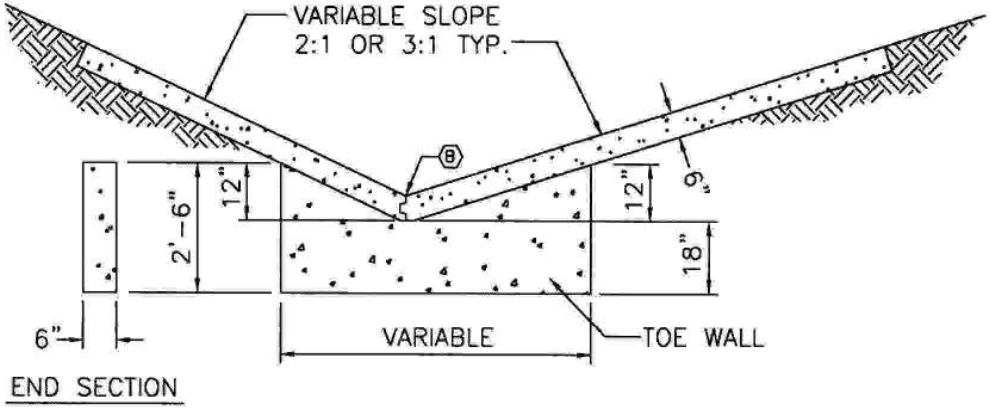

SECTION THROUGH SWALE

SHOWING TOE WALL OR CUT-OFF WALL

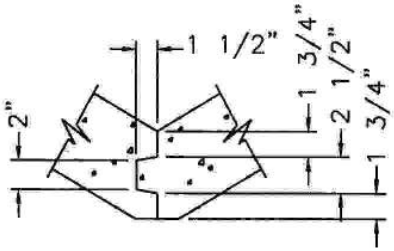

B JOINT DETAIL

NOTE:
CONCRETE SHALL BE CLASS E

Approved 02/19/02
Date
Revisions

COUNTY OF BOONE MISSOURI
PUBLIC WORKS

CONCRETE SWALE
(V-Type)

530.01

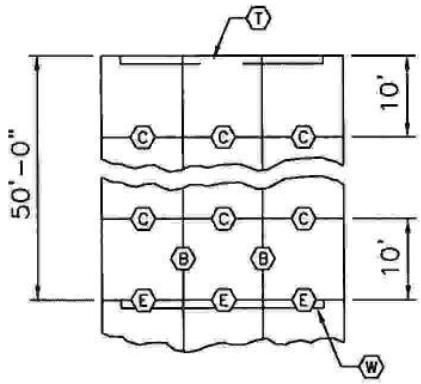

PLAN VIEW

LEGEND

- (C) SAW JOINT, FILL WITH BITUMASTIC JOINT SEALANT – SEE DETAIL.
- (E) 1/2" EXPANSION JOINT AT 50' INTERVALS
- (B) KEY JOINT (SEE DETAIL)
- (T) TOE WALL TO BE CONSTRUCTED AT OUTLET END OF PAVED DITCHES.
- (W) CUT-OFF WALL @ 50'-0" SPA.

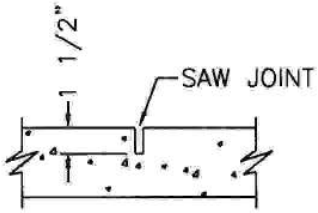

JOINT DETAIL

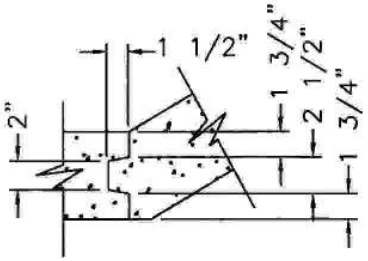

B JOINT DETAIL

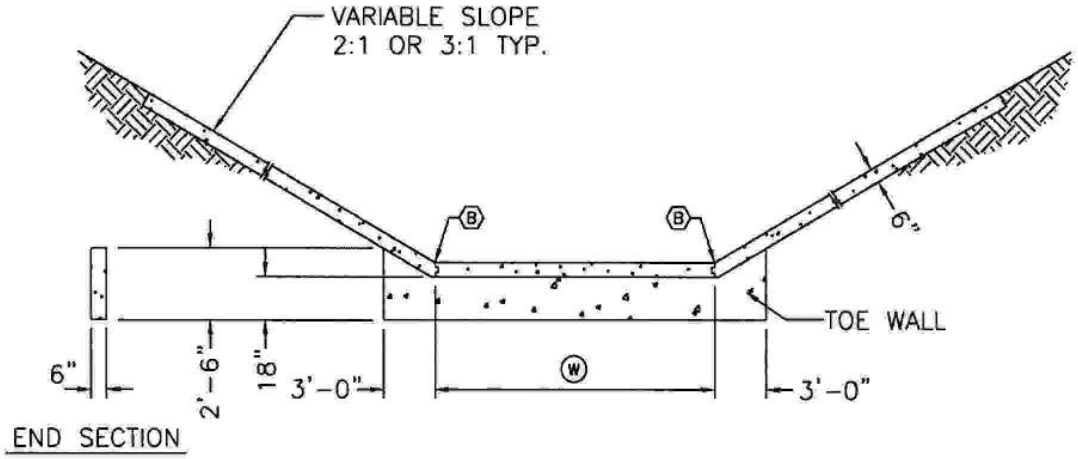

END SECTION

SECTION THROUGH SWALE

SHOWING TOE WALL OR CUT-OFF WALL

NOTE:
CONCRETE SHALL BE CLASS E

Approved 02/19/02
Date

Revisions

PUBLIC WORKS

COUNTY OF BOONE MISSOURI

CONCRETE SWALE
(Flat-Bottom Type)

530.02

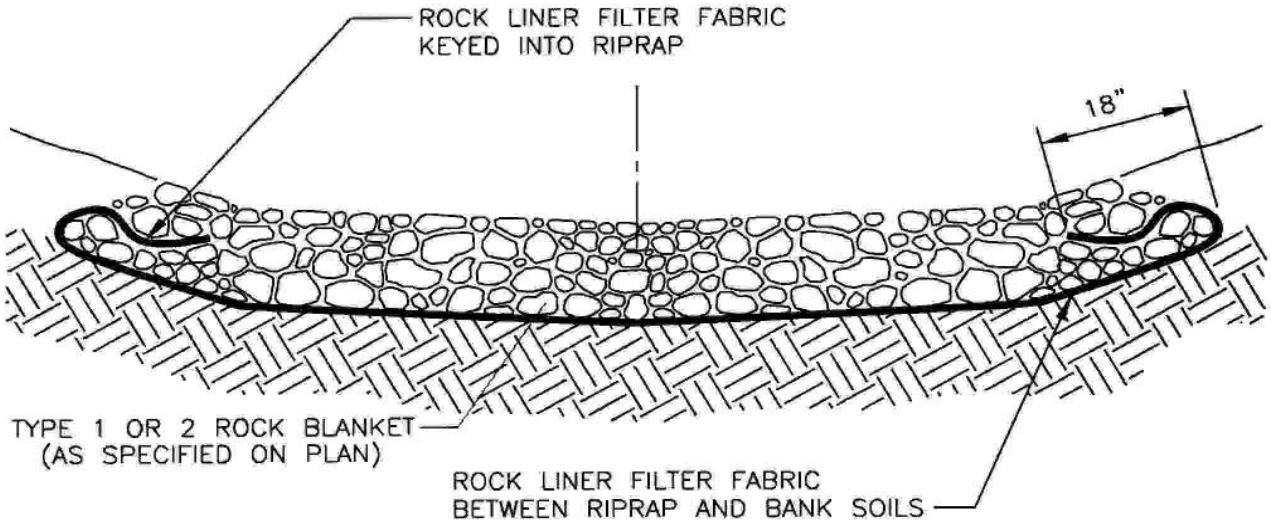

NOTE:

1. ROCK LINER FILTER FABRIC SHALL CONSIST OF A NON-WOVEN, POLYPROPYLENE TYPE FABRIC SUCH AS: AMOCO 4553 NON-WOVEN GEOTEXTILE FABRIC OR APPROVED EQUAL.

DWM Approved	02/19/02 Date	COUNTY OF BOONE MISSOURI PUBLIC WORKS	RIP RAP W / FILTER FABRIC	530.03
Revisions				