CHAPTER 12
PUBLIC INFRASTRUCTURE
TABLE OF CONTENTS
(UPDATED 11-20-2014)

Article I. Dedication of Infrastructure to the City

12.005. Definitions	Pg. 3
12.010. Ordinance Required to Accept dedication	Pg. 4
12.015. No Presumption of Acceptance	Pg. 5
12.020. Procedure to Accept Dedication	Pg. 5
12.025. Private Roads	Pg. 5
12.027. Development Construction Permit	Pg. 6
12.030. Building Permits not to be issued until infrastructure	Pg. 6
12.033. Inspections	Pg. 6
12.035. Variations from provisions	Pg. 7

Article II. Construction of Improvements Utilities

12.100. Sanitary Sewers	Pg. 7
12.105. Sewer Laterals	Pg. 7
12.110. Utility Services	Pg. 8
12.115. Utility Easements	Pg. 8
12.120. Water Lines	Pg. 8
12.125. Fire Hydrants	Pg. 8

Article III. Streets and Alleys

12.200. Construction of Street and Alleys	Pg. 9
12.202. Opening new or resurfaced streets-penalty for	Pg. 9
12.205. Monuments	Pg. 10
12.210. Streets and alley's; general provisions	Pg. 10
12.215. Streets and alley's; minimum and maximum lengths	Pg. 11
12.220. Streets and alley's; right-of-way, design	Pg. 11
12.225. Streets and alley's; widths, passing distance and parking	Pg. 12

Article IV. Sidewalks, Curbs and Driveways

12.300. Driveway Improvements	Pg. 13
12.305. Work to be done in accordance with standard plans	Pg. 13
12.310. Operations under supervision of City Administrator	Pg. 13
12.320. Authority of City Administrator	Pg. 13
12.325. Handicapped ramps required	Pg. 14
12.330. Permit Required	Pg. 14
12.335. Application	Pg. 14
12.340. Fee	Pg. 14
12.345. Issuance	Pg. 14

Article V. Street Lighting

12.400. Streetlights must be authorized and approved	Pg. 15
12.410. Streetlights, spacing and design	Pg. 15
12.420. Subdivision	Pg. 16
12.425. Removal and moratorium	Pg. 16
12.430. Appeal	Pg. 16

Article VI. Stormwater Management Regulations

12.500. Definitions	Pg. 16
12.505. Purpose	Pg. 21
12.510. Applicability	Pg. 21
12.515. Exemptions	Pg. 22
12.520. Stormwater Management Plan Application & fees	Pg. 23
12.525. Stormwater Management Plan	Pg. 24
12.530. General Design Requirement	Pg. 27
12.535. Hydraulic Design Considerations	Pg. 29
12.540. Stormwater Management System Design Requirements	Pg. 30
12.545. Rights-of-Way & Easements	Pg. 37
12.550. Maintenance Responsibilities	Pg. 38
12.555. Plan Adherence	Pg. 40
12.557. Silt Fencing & Inlet Protection	Pg. 40
12.560. Enforcement & Penalties	Pg. 40
12.565. Vested Rights	Pg. 42
12.570. Conflict with other Ordinances & Codes	Pg. 43
12.572.5. Other Ordinances	Pg. 43
12.575. Other Permits	Pg. 43
12.580. Interpretation	Pg. 43
12.585. Abrogation & Greater Restrictions	Pg. 43
12.590. Liability Disclaimer	Pg. 43
12.595. Final Approval Required	Pg. 44

APPENDIX A-G Attached

CHAPTER 12
PUBLIC INFRASTRUCTURE

Article I. Dedication of Infrastructure to the City

12.005. Definitions

For the purpose of this ordinance, the following words, terms and phrases shall have the meaning given herein:

Alley. Minor ways which are used primarily for vehicular service access to the back or side of properties abutting on a street.

Arterial Street. A heavily traveled street of considerable continuity used primarily as main traffic artery.

Building Line. A line or lines on a plat designating the area adjacent to the street right-of-way inside of which no building or structure may be erected.

Building Official. The Zoning Inspector of the City or his authorized representative.

City. The City of Ashland, Missouri, a municipal corporation which, territorially, shall include all land within the corporate limits of the City as such limits now exist or may, from time to time be extended or retracted.

Board of Aldermen. The governing body of the City. Commission. The Planning and Zoning Commission of the City. Zoning Inspector. The Zoning Inspector of the City of Ashland, or his authorized representative.

City Engineer. The City Engineer of the City, or his authorized representative.

Collector Street. A street which carries traffic from minor streets to arterial streets.

Cul-de-sac. A dead-end street terminating at its end with a turn around facility.

Easement. A grant by the property owner to the public, a corporation or persons, of the use of a strip of land for specific purposes.

May. An action, which is permissive.

Monuments. The physical object which marks the corner point determined by the surveying process. The accessories, such as bearing tress, bearing objects, reference monuments, mounds of stone and other similar objects that aid in identifying the corner position, are also considered a part of a corner monument;

Lot Corners. An iron pipe not less than 1" outside diameter or a reinforcing bar not less than ½" in diameter and not less than 30" in length set not less than 24" in the ground.

Control Points. An iron pipe or reinforcing bar as described in "Lot Corners" set in concrete 4" in diameter and 12" in depth, or a 4" X 4" concrete post set not less than 24" in the ground with the top of the post adequately marked to define the control point. A permanent pavement marker acceptable to the City Engineer may be utilized to define the centerline of right-of-way at the control points in lieu of the above-described monuments.

Owner. An individual, firm, association, co-partnership, corporation or syndicate, or agent of any of them, having sufficient proprietary interest in any land sought to be subdivided to commence and maintain proceedings to subdivide land under the provisions of this ordinance.

Plat. An accurate drawing or map of the land proposed to be subdivided.

Sketch Plat. A drawing of the proposed subdivision, not necessarily to scale, but indicating general topographic features and the general layout of the proposed subdivision, according to the requirements of Chapter 11.

Preliminary Plat. The preliminary plat indicating the proposed layout of the total subdivision so designated on the plat and including all land which the subdivider could propose to subdivide now or in the future. (amended 12-04-07 Council Bill No. 2007-050)

Final Plat. The final map of all or a portion of the subdivision, so designated on the plat and meeting the requirements of Chapter 11 and prepared for official recording with the Recorder of Deeds of Boone County, Missouri.

Shall. An action which is mandatory.

Turnaround. A space permitting the turning around of a vehicle, similar to a cul-de-sac, located intermittently as a cul-de-sac or a closed-end street.

12.010. Ordinance Required to Accept Dedication

After June 1, 2002, no street, park, easement, water line, sewer line, facility nor any other type of land, land use, or infrastructure shall be considered to have been dedicated to public use, nor considered to be public property, regardless of any indication on a plat, unless accepted by the City Board by ordinance.

12.015. No Presumption of Acceptance

Nothing in this Chapter shall be construed as determining whether land or infrastructure, which is alleged to have been dedicated to the City prior to January 1, 2000, has in fact been accepted by the City.

12.020. Procedure to Accept Dedication

After June 1, 2002, no dedication of roads, water lines, storm water sewers, sanitary sewers, or any other form of infrastructure, for public use shall be considered for acceptance unless all of the following conditions are fully complied with:

1. Prior to beginning construction, the owner of the property shall obtain a Development Construction Permit from the City of Ashland.

2. All designs for the property must comply with existing City standards, including but not limited to design standards of this chapter.

3. All construction must be supervised as provided in the City of Ashland's Code of Ordinances.

4. Prior to, or contemporaneous with, the acceptance of the property, the City Board must find that the purposed property will be useful to the City.

5. Prior to the consideration of acceptance of property, owner shall provide the City with "as built" plans of every improvement to be dedicated and a plat of any property or easements to be dedicated.

6. The developer shall submit a written warranty, in a form acceptable to the City, warranting the property for its intended use against any and all defects or failures, whether caused by design, installation, nature, or any other cause for a period of three years from the date of acceptance of the improvements described therein.

7. The Board of Aldermen must be in receipt of a Certificate of Completion for all improvements to infrastructure. A Certificate of Completion shall be issued by the Administrative Officer or designee upon the officers finding of satisfactory completion.
   (Section amended Ordinance No. 896, 8-02-2011)

12.025. Private Roads

Any street, road, drive, avenue, or roadway of any kind, which has not previously been dedicated to the City as a public street is hereby declared a private street, not to come under the responsibility control or authority of the City of Ashland.

12.027. Development Construction Permit

A. No site construction activity shall occur, until a development construction permit has been issued by the Administrative Officer or designee. No such permit shall be issued without all required approvals and permits as described in the City of Ashland's Code of Ordinances.

B. An application for a permit shall be submitted in such form as the Administrative Officer may prescribe. Such application shall be made by the owner or lessee, or agent of either, or the architect, engineer. If such application is made by a person other than the owner in fee, it shall be accompanied by a duly verified affidavit of the owner in fee, or of the person making the application, that the proposed work is authorized by the owner in fee and that the person making the application is authorized to make such application.

C. A minimum of four (4) copies of said site construction plan shall be submitted to the City at time of application.

D. A fifty ($50.00) fee shall be paid for each Development Construction Permit Application. This fee may be adjusted from time to time by the Board of Aldermen to reflect cost changes. The Development Construction Permit Application fee and any required reimbursement shall be collected by the City before the permit is issued to the applicant. (added this Section by Ordinance No. 896, 8-02-2011)

12.030. Building Permits Not to be Issued Until Infrastructure Complete

A. Building permits will not be issued in any part of the development until infrastructure is complete.

B. In lieu of infrastructure completion the developer may furnish a corporate surety performance bond, cash escrow or other security acceptable to the City to ensure actual construction and installation of the subdivision improvements required herein. Once building permits have been issued for seventy-five percent (75%) of the lots in a recorded development, no additional permits shall be issued until all of the improvements required by this ordinance have been installed and the procedures for dedication to the City, except for the completion of the warranty period, has been completed. However no building permit will be issued to any individual lot which is not serviced by completed infrastructure. (amended 1-02-07 Ordinance No. 2006-058) (amended Ordinance No. 896, 8-02-2011) (amended Ordinance No. 896, 8-02-2011)

12.033. Inspections

All public improvements proposed to be made under the provisions of this chapter shall be inspected and tested during the course of construction by a duly designated representative of the City of Ashland. All fees and costs

connected with inspections, testing, and plan review for improvements shall be paid for by the developer. The developer shall submit payment for plan review upon submittal of a Development Review Application. The developer shall submit payment for inspection and testing at the time of construction permit issuance.

All testing and inspection methods and procedures shall meet the current standards as adopted by the City of Ashland. The City of Ashland also reserves the right to use methods, procedures, and standards as adopted by the Missouri Department of Transportation, the Missouri Department of Natural Resources, and/or other state and federal agencies which have regulations and standards for testing and inspection. (new Section added Ordinance No. 896, 8-02-2011)

12.035. Variations from provisions

1. When the Zoning Inspector and the City Engineer determines that in a particular instance an owner cannot possibly or practically observe the requirement of any provision or provisions of this Chapter because of the presence of unusual circumstances or conditions, and that the strict application of the requirements of such provisions would either prevent, or present as serious obstacle to the formulation of a plat for the reasonable use and development of land in subdivision form, they shall make a written recommendation to the Board of Aldermen that a variation from the requirements of such provisions be permitted and state the facts upon which the recommendation is made as well as a detailed description of the proposed alternative.

2. The board, upon consideration of the facts presented with the recommendation, may permit the owner to vary from the requirements of such provisions if it determines that the intent of this ordinance is not being violated and that the alternative design will be substantially materially or adversely affected.

Article II. Construction of Improvements Utilities

12.100. Sanitary Sewers

All sanitary sewers and appurtenances and storm sewers shall be constructed according to the standards and specifications of the City on file in the office of the City Engineer.

12.105. Sewer Laterals

Sewer laterals shall be stubbed in prior to street paving if the sewer main is located under paved street right-of-way. All such service connections shall be extended at least two (2) feet beyond the edge of pavement and shall be adequately referenced and marked for future use. All such services shall be installed in accordance with applicable codes and ordinances and the specifications of the City Engineer on file.

12.110. Utility Services

Utility services shall be installed under the streets prior to paving where subsurface conditions prevent pushing of service under the completed pavement.

12.115. Utility Easements

Whenever a street or utility is to be dedicated to the City, utility easements for distribution systems shall be located as deemed necessary by the Commission after recommendations have been received from the City Engineer. The width of utility easements shall be as determined by the City Engineer but in no event shall it be less than ten (10) feet.

12.120. Water Lines

1. Developer to provide in Subdivisions: The developer of any subdivision shall be required to provide or cause to be provided adequate water main lines and fire hydrants for fire protection in the subdivision.

2. Waterline Specifications. Water main lines shall be a minimum of six (6) inches in diameter. Larger water main lines shall be installed according to City standards as promulgated by the City Engineer and on file with the City Clerk.

3. All developers shall construct distribution mains from the end of the existing water main to and across the entire frontage or other dimension of the lot or tract to be served, except as otherwise herein provided. Such extension shall be of pipe size, as determined by the City which will provide adequate fire protection and service to the area, but in no case be less than six (6) inches. The developer shall assume all costs for the completion of water main extension. Should the City require a pipe size larger than that required to provide adequate fire protection and service to the area, then the City shall pay for the difference in cost of such larger line.
   (Amended Ordinance No. 2006-017, 4-18-2006)

12.125. Fire Hydrants

1. Fire Hydrants Required.

On every public or private street constructed within the City fire hydrants shall be placed in intervals of not more than six hundred (600) feet along all streets. In districts where a block between two intersecting streets is longer than four hundred (400) feet but less than six hundred (600) feet, said block shall require a fire hydrant to be placed at the corner of the intersecting streets. In all other districts, fire hydrants shall be placed in intervals of not more than three hundred (300) feet along all subdivision streets.

2. Fire Hydrants, when installation not possible, procedures.

When the actual installation of fire hydrants, as otherwise required by this code, is prohibited due to inadequate water volume or other such problems beyond the control of the developer, the developer shall in lieu of installing such hydrants, shall pay to the City the sum of One Thousand Two Hundred and no/100 Dollars ($1,200.00) per hydrant to cover the actual cost of installing each such hydrant, including both parts and labor.

Article III. Streets and Alleys

12.200. Construction of Streets and Alleys

1. Developer to provide in subdivisions: The developer of any subdivision shall be required to provide or cause to be provided streets and alleys such that every lot adjoins a public or private roadway.

2. Streets and alleys shall be constructed as prescribed in this Code. (see Appendix J-Street and Right-of-way Regulations) The Building Inspector shall not issue a building permit for any structure to be placed on a lot in a recorded subdivision until the streets and alleys have been constructed along the entire frontage of the lot for which the permit is requested properly connecting the frontage to the City's street system. In the case of a corner lot both streets shall be constructed along the entire length of both frontages of the lot and shall provide a proper connection to the City's street system. During the non-paving season a permit may be issued if a cash escrow, equal to the cost of the construction, is posted in lieu of the street paving and if a temporary granular driving surface is provided to the structure.

3. When a street is constructed as provided in subsection (a) above and is not constructed through on both ends to an intersection or a permanent cul-de-sac, a paved, temporary turn-around shall be constructed.

12.202. Opening new or resurfaced streets-penalty for restoration costs

When contractors or utility companies have been given notice of construction or resurfacing of streets, walks, alleys or ways at least ninety (90) days in advance by a City Official or employee, no opening shall be permitted on such new streets, walks, alleys, or ways for a period of ten (10) years unless in an emergency and where tunneling or other suitable methods cannot be employed. No openings in new streets will be permitted except by permission of the City Administrator or his designee, when the public health or safety is endangered. Should any excavation as herein permitted be made, the party making such excavation shall repave the entire block wherein such excavation is made except when the City Administrator or his designee, certifies such work to be necessary to protect the public health or safety. (amended 10-02-2012, Ordinance No. 929)

12.205. Monuments

As described under the subdivision code, control point monuments shall be installed and adequately referenced to facilitate future replacement. Control point monument locations shall be verified or re-established after street paving has been completed and prior to acceptance of the street for maintenance by the City.

12.210. Streets and alleys; general provisions

1. Layout and Alignment. All subdivision streets shall be arranged to provide for the continuation of existing streets in adjoining subdivisions and, to the extent possible, the anticipated projections of streets through adjoining un-subdivided or undeveloped property to allow for convenient movement of vehicular traffic and the orderly development of adjoining property and shall adhere to the Master Street Plan where applicable.

2. When a new subdivision adjoins undivided lands, susceptible to being subdivided, the new streets shall be carried to the boundaries of the tracts proposed to be subdivided at a later date and a temporary cul-de-sac shall be installed at this point.

3. Permanently designed dead end cul-de-sac streets shall not be longer than eight hundred (800) feet and shall be provided with a turn-around at the closed end.

4. Streets shall intersect one another at as near a right angle as possible and no intersection angle shall depart from a right angle more than twenty (20) degrees. Residential street intersections shall be rounded with a radius of twenty (20) feet for right angle intersections. All other intersections radii shall be as approved by the City Engineer.

5. All streets in exact or approximate alignment with existing named streets shall bear the names of such existing named streets. All other streets shall be assigned names, which do not conflict with names of existing streets. Postal addresses for each lot shall be assigned by the City. (amended Council Bill No. 2008-040 9-16-08)

6. Whenever there exists a platted half street or half alley adjacent to land platted for a subdivision, the remaining half of the street or alley shall be provided for on the plat of the subdivision.

7. Numbering of houses, buildings, mobile homes
   a) It is hereby made the duty of the owner of each house or building within 150’ of a public street to keep and maintain the number so established on such house or building in numerals at least two (2) inches high at a place where it shall be clearly visible from such street. Houses or buildings located over 150’ from a public street shall keep and maintain the numerals on their mailbox or on a sign post located at their driveway within 10’ of the public right-of-way. (amended Council Bill No.2008-040, 9-16-2008)

b) The owner or manager of a mobile home park shall establish a map of the layout of the mobile home park, showing the location of individual mobile home spaces by number, and shall keep or maintain the number so established on such individual mobile home space lot or on the mobile home at a place where it shall be clearly visible from the street, drive or roadway on which it fronts.

c) Any person violating this section who fails to abate or correct such violation within fifteen (15) days of receiving notice of such violation shall be deemed guilty of a misdemeanor. (amended Council Bill No. 2004-005, 4-06-2004)

12.215. Streets and alleys; Minimum and Maximum Lengths

The minimum and maximum block lengths shall be as follows:

Type	Minimum	Maximum
Arterial	300'	1000'
Collector	300'	1000'
Commercial	Administrative Approval	1000'
Residential	Administrative Approval	1000'
Lane-Court	Administrative Approval	1000'
Place-Court	Administrative Approval	1000'

12.220. Streets and alleys; right-of-way, design

1. No street, except a Place-Court or a Lane-Court, shall have more than fifteen (15) percent grade, and a Residential Street may have a maximum grade of twenty (20) percent when it is not a dead-end street.

2. The Board of Aldermen hereby adopts the standards of the County of Boone now in effect and as may from to time amended by the County, regarding minimum standards for road construction before a road will be accepted by the County, as the minimum standard for the City before the City will accept a road as public property or before the City will agree to maintain any street not currently maintained by the City.

3. The minimum residential street slab thickness shall be either:

   (a) six inches Portland Cement concrete; or

   (b) three and one-half inches (3 ½") black base with one and one-half (1 ½") inches Type "C" asphaltic concrete (Missouri State Highway Specifications) on four (4") inches of compacted base rock, or as per current standards established by the City Engineer and on file with the City Clerk, with Portland Cement concrete curb and gutters as set forth in this Chapter. All developers shall be required to meet this minimum requirement regardless of the street classification. Additional design requirements above the minimum specified herein shall be as set forth by the City.

12.225. Streets and Alleys, Widths, Passing Distance and Parking

Classification	Right of way Minimum	Paved Surface Minimum	On Street Parking Allowed?*
Residential	50'	27'	No
Residential	60'	34'	Yes
Place-Court	50'	24'	No
Lane-Court	50'	27'	No
Commercial	60' 60' 50'	39' 32' 27'	Both Sides One Side No
Collector	60'	39' 32'	Both Sides One Side
Artery	80'	37'	No

* When an owner elects to restrict on street parking, all signs indicating the same must be provided by the owner/developer.

Article IV. Sidewalks, Curbs and Driveways

12.300. Driveway Improvements

Whenever any premises or any structure on any premises is constructed, reconstructed, redeveloped, improved or altered:

(1) Generally. All existing driveways on such premises which are not abandoned shall be improved to conform with the design standards included in the city's standard plans and specifications referred to in Appendix 12A of this Chapter except that this provision shall apply to existing residential structures only when enclosed additions are attached to the main structure or when the existing driveway is enlarged in size; and

(2) Abandoned driveways. All abandoned driveways on such premises shall be eliminated and new curbs, gutters and sidewalks shall be constructed in accordance with design standards included in the city's standard plans and specifications referred to in Appendix 12A of this Chapter.

12.305. Work to be done in accordance with standard plans and specifications

Any person who shall do any work for which a permit is required hereunder shall conduct such work in accordance with standard plans and specifications on file in the office of the City Administrator and attached to this Chapter as Appendix 12A.

12.310. Operations under supervision of City Administrator

All operations for which a permit is granted pursuant to this article shall be under the direction and supervision of the City Administrator.

12.320. Authority of City Administrator

Whenever the use, convenience or necessity of the public shall require it, the City Administrator shall have the authority to order the owners or agents in charge of property adjacent to which curb cuts, sidewalks, curbs, or driveways are maintained upon the public streets or rights-of-way, to alter such improvements in such manner as he shall find reasonably necessary under the circumstances, if such improvement fails to conform to the aforesaid standard plans and specifications. The director shall allow a reasonable period of time for such alteration to be made. It shall be unlawful for any person to

maintain such nonconforming curb cut, sidewalk, curb or driveway after the expiration of such time.

12.325. Handicapped ramps required

Whenever a permit is issued to construct, reconstruct, repair, alter or grade any sidewalk curb, curb cut, driveway or street, handicapped ramps shall be required to be installed in accordance with design standards included in the city's standard plan and specifications at all curb and driveway crossings to be constructed, reconstructed, repaired or altered; provided that the City Administrator may waive said requirement if he determines that requirement of handicapped ramps is impractical under all the circumstances.

12.330. Permit Required

No person shall construct, reconstruct, repair, alter or grade any sidewalk, curb, curb cut, driveway or street on the public streets or rights-of-way without first obtaining a permit from the City Administrator.

12.335. Application

An applicant for a permit hereunder shall file with the City Administrator an application showing:

(1) The name and address of the owner or agent in charge of the property abutting the proposed work area.
(2) The name and address of the party doing the work.
(3) The location of the work area.
(4) Such other information as the City Administrator shall find reasonably necessary to the determination of whether a permit should be issued hereunder.

12.340. Fee

An application for a permit hereunder shall be accompanied by a fee of twenty-five dollars ($25.00).

12.345. Issuance

The City Administrator shall issue a permit hereunder when he has determined:

(1) That a sufficient application has been made, accompanied by payment of the filing fee.

(2) That the work will be done according to the standard plans and specifications on file in the office of the City Administrator.

(3) That the operation will not unreasonably interfere with the vehicular and pedestrian traffic, the demand and necessity for parking space, and the means of egress to and from the property involved and adjacent properties.

(4) That the health, welfare and safety of the public will not be unreasonably impaired.

Article V. Street Lighting

12.400. Streetlights must be authorized and approved

Public streetlights may only be installed upon written authorization of the City. Electric utility providers will submit plans to the City Administrator for the location of proposed new streetlights for a determination of compliance with this Article and this Code prior to installation. Any street light installed without prior written authorization of the City will be considered to be a private street light and all associated costs, including but not limited to, installation costs, maintenance, and utility fees, will be the responsibility of the property owner. Public streetlights shall be operated at the expense of the City.

12.410. Streetlights, spacing and design

1. There shall be a street light at each street intersection and at or within one hundred feet (100') of a cul-de-sac and no closer than a distance of four hundred feet (400') nor further apart than a distance of five hundred feet (500'). All distances shall be measured along outer edge of the pavement or curb.

2. The City Administrator may authorize spacing of less than four hundred feet (400') when needed for traffic safety, such as locations of abrupt horizontal or vertical grade changes.

3. The City Administrator may grant additional lighting on the basis of high concentrations of pedestrian traffic such as downtown, schools, or similar areas or where there exist serious traffic hazards or a high incidence of crime based upon the recommendations of the Chief of Police. Nothing in this section should be construed as relieving the property owner or occupier of the duty to provide security lighting.

4. Property owners may petition the City for additional street lights closer than four hundred feet (400') apart by submitting a petition to the City Clerk signed by three (3) property owners whose property contains, adjoins or abuts the proposed location for the streetlight. For this purpose, properties divided by a public road shall be considered to be adjoining if they would be adjoining should the road be vacated. Such a petition must be accompanied by a fee (based upon present costs) equal to the first three (3) years utility fee for residential location or five years in a

commercial location for a street light of the proposed type in the proposed location. In addition, the petitioners shall submit a fee equal to the estimated cost of erecting the new light as determined by the utility provider. Upon the submission of a proper petition accompanied by the proper fee, the City Administrator shall authorize the installation of the proposed streetlight as a public streetlight.

12.420. Subdivision

In addition to any other requirement provided in this Code, any developer of any subdivision shall show on the preliminary plat, the location of all streetlights. The developer shall be required to provide for the erection of such streetlights at the time that any street, which is served by the light is paved. Streetlights shall be designed and placed in accordance with the provisions of this Article. The costs of erection of the light shall be borne by the developer.

12.425. Removal and Moratorium

The Board of Aldermen may, by majority vote, cause to be removed any streetlight which the Board determines in unnecessary or superfluous. The authorization of the City Administrator shall not be considered to bind the City to erect any light at its own expense. The Board may declare a moratorium on the erection of new lights if financial considerations so warrant.

12.430. Appeal

Decisions of the City Administrator, as provided in this section, may be appealed to the Board of Adjustment. Any appeal not filed within ninety (90) days shall be waived. Decisions of the Board of Adjustment may be appealed to the Board of Aldermen as provided in this Code.

Article VI
Stormwater Management Regulations

12.500 Definitions

Unless specifically defined, words or phrases shall be interpreted so as to give them the meanings they have in common usage and to give this Chapter its most reasonable application:

10-YEAR STORM: Rainstorms of varying duration and intensities having a ten percent (10%) probability of being equaled or exceeded in any given year.

25-YEAR STORM: Rainstorms of varying duration and intensities having a four percent (4%) probability of being equaled or exceeded in any given year.

100-YEAR STORM: A rainstorm of varying duration and intensity having a one percent (1%) probability of recurring in any one (1) year.

ADMINISTRATIVE OFFICER: The duly appointed City Administrator or their designated representative.

ADVERSE IMPACT: Any modifications, alterations or effects on a feature or characteristic of surface waters including their quality, quantity, hydrodynamics, surface area, species composition, living resources, aesthetics or usefulness for human or natural use which are or may potentially be harmful or injurious to human health, welfare, safety or property, to biological productivity, diversity or stability or which unreasonably interfere with the enjoyment of life or property, including outdoor recreation. The term includes secondary and cumulative, as well as direct impacts.

APPLICANT: The record owner or his/her authorized representative of a tract of land that is the site of development or development activity within the scope of this Article.

BASE FLOOD ELEVATION: The elevation at any location delineating high waters having a one percent (1%) probability of being equaled or exceeded in any given year (also known as the 100-year flood).

CAPACITY OF A STORM DRAINAGE FACILITY: The maximum ability of a storm drainage facility to convey, detain or retain stormwater flows without causing substantial damage to public or private property, and in the case of a pipe, without surcharging.

CHANNEL: A natural or artificial open watercourse with definite bed and banks which periodically or continuously contains moving water or which forms a connecting link between two (2) bodies of water.

CONDUIT: Any channel, pipe, sewer or culvert used for the conveyance or movement of water, whether open or closed.

CONTROL DEVICE: An element of a discharge structure that allows the gradual release of water under controlled conditions.

CONTROL ELEVATION: Design elevation of a discharge structure at which, or below which, water is contained behind the structure.

DETENTION: The delay of storm runoff prior to discharge into receiving waters.

DETENTION BASIN: A facility constructed or modified to restrict the discharge of stormwater to a prescribed maximum rate and to concurrently detain the excess waters that accumulate behind the outlet. A wet bottom detention basin is a structure designed to retain a permanent pool of water after having provided its planned detention of runoff during a storm event. A dry bottom detention basin is designed to be completely dewatered after having provided its planned detention of runoff during a storm event.

DETENTION STORAGE: The temporary detaining or storage of stormwater in storage basins or rooftops, in streets, parking lots, school yards, parks, open space or other areas under predetermined and controlled conditions with the range of drainage regulated by appropriately installed devices.

DETENTION VOLUME: The volume of water equal to the difference between the control elevation of a discharge structure and the maximum level at which water can be accumulated prior to discharge times the average area of open surface storage (between the control elevation and maximum level) behind the discharge structure.

DEVELOPER: Any individual, firm, corporation, association, partnership or other entity involved in commencing proceedings under this Article to effect the development of land for him/her or another.

DEVELOPMENT OR DEVELOPMENT ACTIVITY: Any manmade change to improved or unimproved land including, but not limited to, buildings or other structures, mining, dredging, filling, grading, paving, excavation or drilling operation. Any subdivision of land as defined in the City's subdivision regulations.

DIFFERENTIAL RUNOFF: The difference in rate and volume of stormwater runoff from a parcel or project in its undeveloped natural condition and its developed condition is known as the differential runoff.

DISCHARGE: The rate of outflow of water from detention storage.

DISCHARGE STRUCTURE: Structural device, usually of concrete, metal, timber, etc., through which water is discharged from a project to the receiving water.

DRAINAGE AREA: The area from which water is carried off by a drainage system, a watershed or catchment area.

DRAINAGE FACILITY: An element in a drainage system which includes, but is not limited to, any of the following: conduits and appurtenant features, canals, channels, detention basins, ditches, streams, culverts, streets and pumping stations.

DRAINAGE SYSTEM: The surface or subsurface system that conveys water from over the land including all watercourses, water bodies and wetlands (also referred to as the stormwater management system).

EASEMENT: A grant by a property owner to the public, a corporation or a person of the use of land for a specific purpose.

ELEVATION: Height in feet above mean sea level according to national geodetic vertical datum (NGVD)

EMERGENCY SPILLWAY: Saddle or low point facility located around the rim of dammed impoundment such as a detention or retention basin for providing an efficient and safe means of conveying the maximum design flood discharge through the impoundment without overtopping the dam.

EROSION: The wearing away of the land surface by the action of the wind, water, ice, gravity or any combination thereof.

EXCESS STORMWATER RUNOFF: The volume and rate of flow of stormwater discharged from a drainage area that is or will be in excess of that volume and rate that is specified in this Article.

FLOOD FRINGE: The higher portion of the floodplain, immediately adjacent to and on either side of the floodway, occupied by quiescent or slow-moving waters during floods.

FLOODPLAIN: The special flood hazard land adjoining a watercourse, the surface elevation of which is equal to or lower than the base flood elevation (the 100-year flood), which is subject to periodic inundation during floods.

FLOODWAY: The channel of a watercourse and those portions of the adjoining floodplain which are reasonably required to carry and discharge the base flood.

HIGHWATER ELEVATION: The elevation of floodwaters of a flood of specified frequency or occurrence at any given point.

IMPERVIOUS SURFACE: A surface that has been compacted or covered with a layer of

materials so that it is highly resistant to infiltration of water. The term includes most
conventionally surfaced streets, roofs, sidewalks, parking lots and similar structures.

IMPROVEMENT: A structure on, or other alteration of land on, a given site including, but not limited to, grading, street paving, storm sewers, sanitary sewers and utilities.

OFF-SITE DETENTION BASIN: A feature or structure for temporarily storing excess stormwater originating at two (2) or more sites having devices for controlling the rate of release of the stored water and located downstream of all sites where the runoff originates.

ON-SITE DETENTION BASIN: A feature or structure for temporarily storing excess stormwater, having devices for controlling the rate of release of the stored waters and located within the sites where the runoff originates.

OVERFLOW ELEVATION: Design elevation of a discharge structure at which point or above which point, water leaks out or bleeds out through a control device down to the control elevation.

PEAK FLOW: The maximum rate of flow of water at a given point in a channel or conduit resulting from a predetermined storm or flood.

POST-DEVELOPMENT CONDITIONS: Those conditions that are expected to exist or do exist after alteration, resulting from human activity, of the natural topography, vegetation and rate, volume or direction of surface or subsurface flow.

PRE-DEVELOPMENT CONDITIONS: Those conditions that existed at the time this Article becomes effective in terms of topography, vegetation and rate, volume or direction of surface or subsurface flow as indicated by the best available historical data.

PRIMARY DRAINAGE (WATER MANAGEMENT) SYSTEMS: Includes major waterways and appurtenant structures or systems whose total tributary area from origin to outfall exceeds or equals fifty (50) acres.

PROFESSIONAL ENGINEER OR ARCHITECT: An engineer or architect duly registered or otherwise authorized by the State to practice engineering.

RECEIVING BODIES OF WATER: Any water body or stream into which surface waters flow.

SEDIMENTATION: The process by which suspended solids from erosion are transported and deposited.

SITE PLAN: The plan, usually in map form, prepared pursuant to the City's zoning or other land development ordinances as required for the development of property.

STORMWATER RUNOFF: The waters derived from rain falling or snow melting within a tributary drainage basis, flowing over the surface of the ground or collected in a stormwater drainage system, storm sewer or watercourse.
SUBDIVISION: As defined in Chapter 11, Section 11.015 *Definitions*.

TIME OF CONCENTRATION: Elapsed time for stormwater to flow from the most distant point in a drainage basin to the outlet or point in question.

WATERCOURSE: Any stream, creek, brook, branch, natural or artificial depression, slough, gulch, reservoir, lake pond or natural or manmade drainage way in or into which stormwater runoff and floodwaters flow either regularly or intermittently.

12.505. Purpose

The purpose for this Article is to lessen or avoid hazards to persons and property caused by uncontrolled stormwater runoff or by obstructions to drainage and to lessen the degradation of the quality of surface runoff.

12.510. Applicability

A. Any person or government entity within the City shall apply to the Administrative Officer for approval of a stormwater management plan and obtain a permit before commencing any development or development activity.

B. A stormwater management plan shall be required of any platted subdivision for which no improvement plans have been submitted at the time this Section takes effect.

C. Detention requirements are directly related to permitted land use in the zoning ordinance of the City. The permitted densities and minimum lot areas are important factors in the anticipated runoff. Table I of this section lists the zoning districts with the major permitted use category, minimum lot area and the corresponding percent of imperviousness.

D. For permitted land uses, other than those listed in Table I, such as schools, churches, fire stations, etc., the rate of imperviousness shall be determined by the same method as the non-residential uses listed in Table I.

E. For conditional land use in any zoning district, the same ration determination criteria shall apply.

Table I **Stormwater Data By Zoning District**			
District	**Major Permitted Areas**	**Minimum Lot Area (Sq. Ft.)**	**Percent of Impervious Area for Design Standards in Table II**
A-1	Agricultural	108,900	*
R-1	Low Density Residential	8,000	35
R-1MD	Moderate Density Residential	8,000	35
R-2	Moderate Density Residential	12,000	35
R-3	High Density Residential	12,000	45
O-1	Office	None	*
C-N	Neighborhood Commercial	None	*
C-G	General Commercial	None	*
C-P	Planned Commercial	None	*
I-L	Light Industrial	None	*
I-G	General Industrial	None	*
APC	Airport Planned Commercial	30,000	*
API	Airport Planned Industrial	108,900	*
AAD	Airport Approach & Departure	108,900	*
* For these classifications, the percent impervious area shall be the actual proposed ration of impervious area to total area for the lot. Also, any lot in any district greater than ten thousand (10,000) square feet shall use an actual ration for determining the percent impervious area.			

12.515 Exemptions

A. Development within a subdivision shall not require approval of a stormwater management plan if each of the following conditions has been met:

1. Drainage provisions for the project were previously approved and remain valid as part of a final plat.

2. The development is conducted in accordance with the stormwater management provisions contained in the development plan submitted with the final plat as approved.

B. Development on isolated lots or record for single-family and two-family dwelling purposes shall not require approval of a stormwater management plan nor a grading permit, unless the development involves altering, rerouting, deepening, widening, obstructing or changing in any way existing drainage facilities, degrades the quality of water, adversely affects any wetland or adversely affects any sinkhole, watercourse or waterbody; or unless said lot is one (1) acre or more in size as State law now requires a land disturbance permit for any construction that disturbs more than one (1) acre. However,, this exemption does not relieve such developments from meeting the requirements of Section 12.557 as specified within this Article. (amended 6-18-2013, Ordinance No. 952)

C. Stormwater management plans may be waived for building construction or other development that will not increase the amount of impervious area on the site and will not adversely impact an existing area or drainage on adjoining properties.

D. Written notice of intent to commence development shall be delivered to the Administrative Officer prior to undertaking any development activity, whether exempt from plan provisions or not. Application for a building permit may constitute notice of intent.

12.520 Stormwater Management Plan Application & Fees

A. *Purpose.* The purpose of the stormwater management plan review process is to provide an organized framework for evaluating and acting upon proposals for development as they relate to stormwater management issues.

B. *Required Information.* It is the responsibility of an applicant to include sufficient information in the stormwater management plan to enable evaluation of the environment quality of the affected area, the potential and predicted impacts of the proposed activity of affected waters and the effectiveness and acceptability of the measures proposed by the applicant for preventing or reducing adverse impacts. The applicant shall furnish the Administrative Officer with three (3) copies of the stormwater management plan sealed by a registered professional engineer or architect.

C. The application form requires the following minimum information:

1. The name, address and telephone number of the applicant and the owner if different from the applicant.

2. Name and address of the professional engineer or architect.

3. The legal description of the property.

D. Application & Review Fees

1. A fifty ($50.00) fee shall be paid for each Stormwater Management Plan Application. This fee may be adjusted from time to time by the Board of Aldermen to reflect cost changes.

2. The applicant shall be responsible for reimbursing the City for any costs associated with the plan review. The fifty dollar ($50) application fee shall not be included in the amount for reimbursement of the costs associated with the plan review.

3. The stormwater permit fee and any required reimbursement shall be collected by the City before the stormwater management permit is issued to the applicant.

12.525 Stormwater Management Plan

A stormwater management plan is designed to safely manage the stormwater runoff following the rainstorms that exceed the maximum allowable release rate and the capacity of the stormwater drainage system and/or the storm sewer by detention of the excess stormwater runoff. It is also designed to manage the quality of stormwater runoff during development through erosion and sedimentation controls. The plan shall provide or be accompanied by maps at a minimum scale of one (1) inch is less than or equal to two hundred (200) feet and other descriptive material, including the basis of computation, showing the following:

1. Required pre-development site information (map scales are minimums):

a. Detailed location sketch showing the parcel and major adjacent roads.

b. Topographic map of the site at a scale of one (1) inch is less than or equal to one hundred (100) feet with maximum two (2) foot contour intervals, except in floodplain or other areas of low relief where a smaller interval may be required.

c. Where percolation or infiltration systems are proposed, information as to the location and type of vegetative cover and soil types and characteristics representative of the design condition mapped at a scale of one (1) inch is less than or equal to one hundred (100) feet.

d. Location of streams and other floodwater runoff channels, their normal channels and the extent of the floodplains at the established high water elevations and the

limits of the floodway mapped at a scale of one (1) inch is less than or equal to one hundred (100) feet.

e. Location of lakes, ponds, swamps and detention basins indicating their normal shorelines, floodplains and lines of inflow and outflow mapped at a scale of one (1) inch is less than or equal to one hundred (100) feet.

f. Location of farm drains, inlets and outfalls, storm, sanitary and combined sewers and outfalls, septic tank systems and outlets, if any, and seeps, springs and flowing and other wells mapped at a scale of one (1) inch is less than or equal to one hundred (100) feet.

g. Location and description of nearby existing off-site water management facilities such as wells, lakes, drainage ways, etc., that are potentially directly affected by the proposed construction or development, mapped at a scale of one (1) inch is less than or equal to one hundred (100) feet.

2. For all existing drainage facilities that are to be maintained, altered or enlarged as part of the stormwater management system; provide information as to their size, slopes, depths, outfalls, receiving waters, elevations, cross sections, profiles, construction materials and other design details as applicable.

3. Location of all new drainage facilities, including detention basins, to be constructed. Provide design details on each facility as applicable.

4. Location and extent of existing and proposed impervious surfaces (roads, parking lots, buildings, etc.) and their elevations. Provide grading and paving plans and specifications.

5. Location and extent of rights-of-way and easements for the stormwater management system, including all areas to be dedicated for water management purposes.

6. Identification and description of any special or required maintenance procedures to keep the project functioning as designed.

7. Provide stormwater management system design calculations as follows:

a. Design storms used.

b. Calculated hydrographs of inflow and outflow of design storms for the project site under natural and undeveloped conditions.

c. Hydrographs of the runoff from the design storm for the project site under developed conditions.

d. For all detention basins, a plot or tabulation of storage volumes with corresponding water surface elevations and of the basin overflow rates for those water surface elevations.

e. Acreages and percentage of property proposed as:

(1) Impervious surfaces.
(2) Pervious surfaces (green areas).
(3) Lakes, canals, detention areas, etc.
(4) Total acreage of project.
(5) Other.

f. Runoff routing calculation showing discharge, elevations and volumes retained and/or detained during applicable storm event.

g. Calculations required for determination of minimum building floor and road elevations.

8. Identify entity responsible for operation and maintenance of the system.

9. The requirements for specific plan elements cited above may be waived by the Administrative Officer upon written supportive recommendation of the City Engineer. The stormwater management plans for minor development activities may consist of a certification from a professional engineer or architect that the differential runoff equals zero.

10. The Administrative Officer will ascertain the completeness of the stormwater management plan application. The Administrative Officer will return incomplete applications to the applicant for completion and resubmission. After determining that the application is complete, the Administrative Officer will distribute copies of the application for review and comment to other persons with special technical expertise as deemed appropriate by the City Administrator. Within a reasonable period, generally within thirty

days, after submission of the completed stormwater management plan application by the applicant, the Administrative Officer shall approve, approve with specified conditions or deny the application and shall notify the applicant accordingly. If the stormwater management plan application is denied or approved with conditions, the Administrative Officer shall state the reasons for denial or the specified conditions. If the applicant feels aggrieved due to the denial or conditions, he/she may appeal the decision to the Board of Aldermen.

12.530. General Design Requirements

A. A stormwater management system shall be provided for protecting lots, roads, streets and buildings in the project area from the potential adverse impacts of stormwater runoff. Streets, blocks, depths of lots, parks and other public grounds and ultimate land usage shall be determined, located and laid out in such a manner as to reduce the velocity of overland flow and allow the maximum opportunity for infiltration of stormwater into the ground and to preserve and utilize natural streams, channels and detention basins and, wherever possible, to include streams and floodplains within parks and other public grounds.

B. The maximum allowable release rate of stormwater after development shall not exceed the before development rate based on a 25-year frequency storm. The total drainage area must be used in calculating the allowable release rate. The required storage volume will be based on the project area only, with extraneous flows from upland areas being by-passed or discharged via overflow spillway or other devices.

C. The increased stormwater runoff resulting from the proposed development shall be detained on-site by appropriate detention basins; by storage on flat roofs, parking lots or streets; or by other acceptable techniques. The minimum volume of storage shall be sufficient to store the volume from a 25-year storm (under developed conditions). Control devices shall limit the discharge from storage to a rate no greater than that prescribed by this Section. Downstream property, watercourses, channels or conduits shall not receive stormwater runoff from proposed development at a higher peak flow rate than that which existed prior to the development.

D. Generally acceptable locations of the stormwater runoff channels in the design of the project area may include the following:

1. In a depressed median of a double roadway, street or parkway provided the median is wide enough to permit required roadway shoulders.

2. Centered on the rear lines in a block or entirely within the rear yards of a single row of lots or parcels, provided that in either case the lots are deep enough to permit side slopes in the runoff channel and a building site of the elevation required by other Sections of this Section.

3. In a depressed area along roadway, street or parkway provided the area is wide enough to permit side slopes as required in other sections of this Article.

4. Alternative systems such as curb and gutter and storm sewers that discharge into an appropriate detention basin may be incorporated into the stormwater management plan.

5. The smaller, uppermost reaches of drainage channels and swales forming the natural drainage system near a watershed divide may be relocated or eliminated and incorporated into the planned system of storm sewers and open channels designed consistent with the requirements of this Article and all applicable State and Federal standards.

E. A continuous easement may be provided abutting rear lot lines as shown in the stormwater management plan within which utility lines and open drainage facilities may be located and maintained, but on which no accessory buildings may be constructed. The utility-drainage easement shall be at least twenty (20) feet wide. Within the areas so designed for the passage or storage of waters, no structure or fence may be erected and no shrubbery or trees planted or changes made to the prescribed grades and contours of the specified floodwater or stormwater runoff channels.

F. All storm sewer outfalls shall be so designed, by reason of elevation of the invert, by a flap gate or by other features, that when the receiving stream is in full flood, the storm sewers will continue to drain the areas they are designed to serve unless the provision is made for sewer back-ups into planned storage locations.

G. All sanitary sewer manholes constructed in a floodplain, in street designed for detention or in an area designed for the storage or passage of floodwater or stormwater shall be provided with either a watertight bolted manhole cover, a watertight concealed pick-hole cover or be constructed with a rim elevation at least one (1) foot higher than the high water elevation of the 100-year flood

or the high water elevation of the design storm, whichever is applicable to the specified area.

H. Projects that are to be developed in phases will normally require the submission of a master plan of the applicant's contiguous land holdings. Applications for individual project phases may be considered only when the phases are totally independent of, or make sufficient provisions for, adjacent lands.

I. Systems such as curb and gutter, drop inlets and storm sewers shall discharge into closed conduits into a detention basin or natural drainage way. Suitable methods of erosion control shall be provided at the discharge of such enclosed conduits.

J. *Flow towards streets.* Any concentration of surface flow in excess of two (2) cubic feet per second (cfs) for the 10-year frequency rain shall be intercepted before reaching the street right-of-way and shall be carried by an enclosed storm drain to connect with a drainage structure at the low point in the street right-of-way or to discharge to a watercourse.

K. Detention facilities shall release stormwater at a non-erosive velocity. Protected channels receiving detention discharge shall incorporate features to reduce velocity to non-erosive levels at the point where such discharge enters the unprotected channel. If release is into a subsurface conduit, the energy gradient in the receiving facility shall not be increased beyond the slope of the conduit.

L. Outlet protection shall also be provided for storm water conveyance systems and culverts. Where necessary, stilling basins shall be implemented to reduce velocities to a 10 year

12.535 Hydraulic Design Considerations

A. Stormwater systems will be designed with sufficient hydraulic capacity as a minimum for the following frequencies and durations:

Type of Facility	**Design Frequency**
Detention basins	25-year
Primary drainage systems	25-year
Bridges	50-year
Secondary drainage systems (i.e. cross drains / ditches for interval subdivision drainage)	25-year

All storm water culverts, pipes, inlets, and boxes shall have overflow swales or other flow paths sufficient to pass the 100 year storm assuming partial (minimum of 20%) clogging on the primary path.

Finish floor elevations for structures (buildings) that have the potential to be impacted by the 100 year flow (accounting for clogging in enclosed systems and including all open systems) shall be a minimum of one (1) foot higher than the 100 year flow path. (amended 11-18-2014, Ordinance No. 1006)

B. The Administrative Officer may require alternative designs or features to reduce the cost of long-term maintenance.

C. In critical areas, the Administrative Officer may require additional hydraulic capacity above the minimums set forth above, up to the 100-year frequency design.

12.540 Stormwater Management System Design Requirements

A. *Method of Evaluation.* Differential runoff evaluation consists of the determination or rates of runoff before and after development, the determination of required volume of detention and verification of adequacy of discharge and control structures.

B. *Differential Runoff Rates.* Differential runoff for all projects shall be evaluated by the rational formula. The runoff coefficients in Table II shall be used. Differential runoff rates shall be evaluated by equations:

Equation 1: $R = (Rd-Ru)$

Where R = Differential runoff rate
Rd = C.I. factor for developed conditions
Ru = C.I. factor for undeveloped conditions

C. *Volume Detention.* Volumes of detention for projects shall be evaluated according to the following methods:

1. The modified rational method may be used for drainage areas less than 30 acres.

2. The SCS hydrograph, HEC-1 or other method shall be utilized for drainage areas greater than 30 acres.

3. Other analytical methods of evaluation of volume of detention will be considered, provided that reliability, professional acceptance and proper application are approved by the Administrative Officer.

E. *Control Structures.* Detention facilities shall be provided with obvious and effective control structures. Plan view and sections of the structure with adequate detail shall be included in plans.

1. The design discharge (Q) for the low-flow weir shall not exceed the 100-year (frequency) with duration equal to the time of concentration for the watershed, runoff from the tributary area for five percent (5%) imperviousness (1.7 c.f.s per acre). The maximum discharge shall be designed to take place under total anticipated design-head conditions.

2. Sizing of the low-flow weir shall be by the appropriate weir formulas.

3. The overflow opening or spillway shall be designed to accept the total peak runoff of the improved tributary area.

4. The low-flow channel invert through dry detention facilities on other than permanently flowing streams shall be paved.

F. *Detention design criteria.* Detention in the overall system, including swales, lakes, canals, greenways, etc., shall be provided as follows:

G. *General.*

1. *Storage volumes.* The minimum volume of storage provided in detention basins, together with such storage as may be authorized in other on-site facilities, shall be sufficient to store the volume from a 25-year storm. (amended 4-01-2014, Ordinance No. 973)

2. *Outlet control structures.* Outlet control structures shall be designed to operate simply and automatically. They will limit discharges into existing or planned downstream channels or conduits so as not to exceed predetermined maximum authorized peak flow rates.

3. *Emergency spillway.* Emergency overflow facilities must be provided in all instances so that stored waters will not exceed the safe capacity of the basin. At a minimum, the emergency spillway must be able to pass without damage the 100-year storm.

4. *Appearance.* Designs should result in aesthetically pleasing configurations that will enhance public acceptability.

H. *Dry Detention Facilities.*

1. Perimeter maintenance easements of fifteen (15) feet (minimum) width at slopes no steeper than 3:1 (horizontal to vertical) shall be provided.

2. Side slopes of the facility shall not be steeper than 3:1 (horizontal to vertical).

3. Provisions must be incorporated to facilitate complete interior drainage to dry bottom basins, to include the provision of natural grades to outlet structures, longitudinal and transverse grades to perimeter drainage facilities or the installation of subsurface drains.

4. Multi-purpose features may be designed to serve secondary purposes for recreation, open space or other types of use which will not be adversely affected by occasional or intermittent flooding.

5. In no case shall the limits of maximum ponding elevation be closer than twenty-five (25) feet horizontally from any building and less than two (2) feet vertically below the lowest sill elevation. The entire reservoir area shall be seeded, fertilized and mulched, sodded or paved.

I. *Wet Detention Facilities.*

1. Perimeter maintenance and operation easements of fifteen (15) feet (preferred minimum) width at slopes no steeper than 3:1 (horizontal to vertical) shall be provided.

2. Control elevations should be no higher than two and one-half (2½) feet below the minimum road centerline elevation in the area served by the control device in order to protect the road subgrade when structures are constructed near roads.

3. Side slopes shall not be steeper than 3:1 (horizontal to vertical) out to a depth of two (2) feet below the control elevation, then as steep as soils stability will allow.

4. If fish are to be used to help keep the basin clean, at least one-quarter (¼) of an area of the permanent pool must be a minimum depth of ten (10) feet.

5. For emergency purposes, cleaning or shore line maintenance, facilities shall be provided or plans prepared for the use of auxiliary equipment to permit emptying and drainage.

6. The limits of maximum ponding elevations are to be no closer than twenty-five (25) feet horizontally from any building and no less than two (2) feet below the lowest sill elevation of any building.

7. Any wet detention facility that is to be turned over to the City for operation and maintenance shall be secured by means of fencing. Fencing plans shall be detailed in the overall stormwater management plan and shall include at a minimum a lockable access point for maintenance personnel and equipment.

J. *Impervious Areas.* Paved parking lots may be designed to provide detention storage of stormwater on all or a portion of their surfaces. Outlets will be designed so as to slowly empty the stored waters and depths of storage must be limited to a maximum depth of twelve (12) inches so as to prevent damage to parked vehicles. Ponding should be relegated to positions of the parking lots farthest from the area served.

K. *Rooftop Storage.* Detention storage requirements may be met in total or in part by detention on flat roofs. Details of such designs to be included in the stormwater management plan application shall include the depth and volume of storage, details of outlet devices and downdrains, elevations of overflow scuppers, design loadings for the roof structure and emergency overflow provisions.

L. *Underground Storage.* All or a portion of the detention storage may also be provided for in underground facilities, as long as all applicable requirements of this Chapter are met. Details of such designs are to include type of facility, depth and volume or storage, details of inlet and outlet devices and locations, emergency overflow provisions and measurers to be used for surface water and ground water pollution control.

M. *Design Alternatives.* The above listing of design criteria is not intended to preclude the use of other know state of the art methods and available Best Management Practices and should not be construed as a mechanism to discourage innovative design concepts.

N. *Developments Adjoining A Floodplain.* Where a development adjoins or encompasses a portion of a floodplain for a 100-year flood, the following shall apply:

1. The applicant shall show the floodplain and floodway on the stormwater management plan.

2. The applicant shall include in the stormwater management plan all other plans, plats, specification, etc., required by Federal, State, County and/or municipal laws or regulations detailing such provisions or restrictions as are necessary to comply with the following:

a. All applicable zoning and subdivision requirements.

b. All applicable Building Code requirements.

c. All requirements of other Federal, State or local agencies exercising jurisdiction over the area.

O. *Channel Flow.* The applicant shall not alter any channel in such a way that would prohibit any section of the channel from conveying, in its post-development state, the same amount of flow at the same or lower maximum water elevation which it conveyed in its pre-development state.

P. *Modifications of Channel.* The applicant shall furnish, for the Administrative Officer's
review and approval, the following information pertaining to proposed channel modifications:

1. Typical cross sections of the existing and proposed channel.

2. Plan view of the channel showing the location of existing constrictions, obstructions and other non-typical areas.

3. Hydrographs and/or flood routing calculations and backwater curve profiles of the proposed waterway corresponding to a storm recurrence interval of one hundred (100) years.

4. Engineering evaluation of all potential increases in flood hazards to the adjacent upstream or downstream private or public lands and facilities located thereon, showing provisions for eliminating any and all adverse impacts on such land and facilities at no public cost.

5. Minimum finished floor elevations that shall be set at or equal to an elevation one (1) foot higher than surface elevation as determined by either or both of the following:

a. Flood Insurance Rate Map published by the Federal Emergency Management Agency.

b. Backwater curve profiles of the proposed waterway due to a 100-year storm recurrence interval.

6. Designation on the final plan of all areas reserved for flood routing, detention or storage, together with the required wording pertaining to restrictions, dedications and maintenance responsibilities of such areas.

7. Modifications shall be designed consistent with the requirements of this Article and all State and Federal applicable standards. Proof of all state and federal permits shall be submitted.

Q. *Detention Storage.* If detention storage is provided within a floodplain, only the net increase in storage volume above that which naturally existed on the floodplain shall be credited to the development. No credit will be granted for volumes below the elevation of the regulatory flood at that location unless compensatory storage is also provided.

R. *Verification of Adequacy.* Analysis of all elements of design is to be verified by the engineer of record submitting the plan. Developer shall be required to submit all design data for verification of adequacy, regardless of the size of the development. The following outline is provided to ascertain that certain critical elements are in workable compliance with the aims of this Section. For projects less than fifty (50) acres in area, there is no need for submittal of routing calculations or tabulated proof of adequacy of tributary runoff for detention; however, it is recommended that verification be made of:

1. Volume of detention for the total project.

2. Tributary (Q) peak runoff to basin.

3. Balanced maximum outflow rate from the low-flow structure.

4. Ratios of inflow to outflow rates.

5. Sizing of the overflow facilities.

6. Stability of detention dikes.

7. Safety features.

8. Maintenance features.

For projects of fifty (50) acres or greater but less than two hundred (200), routing calculations shall be submitted in legible tabulated form. Proof of adequacy of volume of detention and sizing computations for low-flow structure shall also be submitted. Features of stability and safety may also need to be documented if the scope of the project requires special attention in this area of design.

Projects over two hundred (200) acres in area shall provide documented verification of adequacy according to scope and complexity of design. (amended 4-01-2014, Ordinance No. 973)

Table II
Average C.I. (P.I.) Factors in CFS/Acre
20 Minute Inlet Time

% Impervious Area	C or P (Factor)		25-year	50-year	100-year
5	0.37		1.85	2.23	2.48
10	0.39		1.95	2.35	2.61
15	0.41		2.05	2.47	2.75
20	0.44		2.20	2.65	2.95
25	0.46		2.30	2.77	3.08
30	0.48		2.40	2.89	3.22
35	0.50		2.50	3.02	3.35
40	0.52		2.60	3.14	3.48
45	0.54		2.70	3.26	3.62
50	0.56		2.80	3.38	3.75
55	0.58		2.90	3.50	3.89
60	0.60		3.00	3.62	4.02
65	0.63		3.15	3.80	4.22
70	0.65		3.25	3.92	4.36
75	0.67		3.35	4.04	4.49
70	0.69		3.45	4.16	4.62
85	0.71		3.55	4.28	4.76
90	0.73		3.65	4.40	4.89
95	0.75		3.75	4.52	5.03
100	0.77		3.85	4.64	5.16
Rainfall			5.40	5.90	6.40

S. *Installation Of Stormwater Runoff Control Measures.* Positive stormwater runoff control shall be provided for during development. Stormwater management plans shall include a schedule for the installation, construction or modification of all drainage facilities. Erosion control measures and a schedule for their installation shall be shown on the stormwater management plan. Installation of drainage facilities and erosion control measures shall proceed as scheduled in the approved stormwater management plan.

T. *Erosion And Sedimentation Control Criteria.* The Best Management Practices to control the occurrence of erosion and sedimentation are to be incorporated into the plan for the time land is disturbed by development activity. Permanent controls and practices shall also be identified where they are necessary to control an ongoing potential for erosion and sedimentation. Types of Best Management Practices include, but are not limited to:

1. Use of State approved standard specifications of the City.
2. Tree, topsoil and vegetative cover preservation and restoration.
3. Surface stabilization with various natural or manmade materials.
4. Runoff control measures such as berms, dikes, sediment traps and barriers.
5. Inlet and outlet protection.
6. Streambank protection.
7. Scheduling of development activities and protection measures for minimal impact.

12.545. Rights-of-Way and Easements

A. All stormwater management facilities shall be constructed within an easement or right-of-way dedicated for stormwater management use and connected to a public road or other location from which operation and maintenance is legally available. Minimum rights-of-way and maintenance easements shall be provided by instrument or plat dedication for all waterways used to convey or detain runoff. Where permanent maintenance will be provided by the property owner, maintenance easement or rights-of-way shall not be required. The minimum widths of rights-of-way and easements shall be as follows:

Facility	**Maintenance Access Width**
Open drainage channel or facility	30 feet, 15 feet each side
Greenways	Width of greenway

Pipes and culverts	15 feet, centered
Detention areas	15 feet continuous around total area
Connecting access	15 feet

B. Easements must include the "top of the bank width" and the maintenance access width.

C. The maintenance access width begins at the point of the bank or slope of the facility.

D. Additional maintenance access width may be required by the Administrative Officer in special circumstances where more width on one (1) or both sides is necessary for maintenance purposes.

12.550. Maintenance Responsibilities

A. *Purpose.* The purpose of this Section is to establish maintenance standards to ensure that after stormwater management facilities have been properly designed and constructed, they continue to function properly. Continued proper functioning is highly dependent upon the proper maintenance of the facilities.

B. *Design of Facilities.* Maintenance costs over a period of years will generally surpass the costs of initially constructing water management facilities. The applicant and the Administrative Officer should utilize all appropriate methods, approaches and techniques to design and construct these facilities in such a manner that fulfills the requirements of this Section, facilitates their inspection and minimizes future maintenance costs.

C. *Maintenance Responsibility.* The growth of noxious weeds, the creation of conditions that support the growth of mosquitoes and other insects and the decrease in available storage by accumulated sediments shall be controlled. The cleanup of accumulated debris, flotsam and other materials after runoff events have subsided shall be assured.

1. Detention facilities, when mandatory, are to be in conjunction with the storm sewer installation and/or grading. Since these facilities are intended to control increased runoff, they must be partially or fully operational soon after the clearing of the vegetation. Silt and debris connected with early construction shall be removed periodically from the detention area and control structure in order to maintain close to full storage capacity.

2. The responsibility for maintenance of stormwater management facilities in single-lot development projects shall remain with the owner, developer and general contractor until final inspection of the development is performed and approved and a legal occupancy permit, where applicable, is issued. After legal occupancy of the project, the maintenance of stormwater management facilities shall be vested with the owner of the project.

3. The responsibility for maintenance of stormwater management facilities in subdivision projects shall remain with the developer until such time as responsibility is transferred, under appropriate legal arrangements, to the private individual owners in the subdivision, the trustees of the subdivision, the City or such other maintenance entity or authority as may be proposed and approved by the Board of Aldermen.

4. If responsibility is to be transferred to the private individual owners in the subdivision, the developer shall assure perpetual maintenance of the drainage management facilities, including detention systems, if any are included, through the adoption of maintenance agreements or covenants for any facilities that remain in private ownership. Such agreements or covenants shall be subject to the approval of the Administrative Officer.

5. If the responsibility is to be transferred to the trustees of the subdivision, the developer shall establish a suitable indenture of trust. Upon release of escrows required for the subdivision development, the responsibility for maintenance shall be vested in the trustees of the subdivision by virtue of the trust indenture. The indenture of trust shall clearly indicate resident responsibility for maintenance and shall be subject to the approval of the Administrative Officer.

6. If responsibility for maintenance is to be transferred to the City, the system to be maintained by the City shall have adequate easements, dedicated to the public for stormwater management use, to permit the City to inspect and enter upon the property, as necessary, to maintain the system.

D. *Performance & Maintenance Security.* Security against defects in workmanship shall be required for any portion of the drainage management facilities dedicated to the public. The terms of the performance security shall apply to any repairs needed and maintenance needed during the three (3) year period following completion. Inspection and repair of defects shall be required as a condition of release of the posted security

12.555. Plan Adherence

The applicant shall be required to adhere strictly to the stormwater management plan as approved. Any changes or amendments to the plan must be approved by the Administrative Officer in accordance with the procedures set forth in this Chapter obtaining stormwater management approval. Enforcement officials shall be and are herein granted inspection rights and right-of-entry privileges in order to ensure compliance with the requirements of this Article.

12.557. Silt Fencing & Inlet Protection

In order to intercept and detain sediment generated from construction activities silt fencing shall be installed around the borders of all properties under construction. Such fencing shall extend the length of the property line on all sides with the exception of a 40' space along a frontage roadway for use as a construction entrance.

Projects which disturb only a portion of a property may request that such erosion protection be limited to the affected area. An erosion protection proposal shall be submitted for such requests and considered by an Administrative Official or designee on a case-by-case basis. Regardless of property size, such proposals shall adhere to the Best Management Practices (BMP's) contained within the most current "Stormwater Permit Requirements for Land Disturbance Activities" as published by the Missouri Department of Natural Resources.

In addition, appropriate protections shall be installed at any nearby stormwater inlet boxes to ensure that any silt or debris is intercepted before entering the stormwater system. As a variety of stormwater inlet protections are available, the City will allow developers to select the method best suited for their project. However, the selected inlet protection must be inspected and approved by an Administrative Official or designee prior to project commencement.

Silt fencing & inlet protection shall be installed and inspected prior to the commencement of construction activities on the site and shall remain fully functional and in place without interruption until a Certificate of Occupancy is issued for the structure. (amended 6-18-2013, Ordinance No. 952)

12.560. Enforcement & Penalties

A. *Enforcement*

1. *Approved Projects.* The Administrative Officer or his/her designated representative shall carry out periodic inspections of the project site to insure the applicant's compliance with this Section. If it is determined that the project is not being carried out in accordance with the approved stormwater management plan, the Administrative Officer is authorized to:

a. *Written notice.* Issue written notice to the applicant or owner, specifying the nature and location of the alleged non-compliance, with a description of the remedial actions necessary to bring the project into compliance within a reasonable specified time.

b. *Stop work order.* Issue a stop work order directing the applicant or owner to cease and desist all or any portion of the work that violates the provisions of this Section, if the remedial work identified in the written notice is not completed within the specified time.

c. *Revocation of approval.* Should the applicant or owner not bring the project into compliance with the written notice and stop work order, he/she shall then be subject to immediate revocation of his/her stormwater management plan approval and to the penalties described in penalties for violation.

d. *Appeal.* Any notice order or revocation issued pursuant to Subsections (A)(1)(a), (A)(1)(b) or (A)(1)(c) above shall become final unless the person named therein requests, in writing, not later than ten (10) days after the date such notice order or revocation is served, a hearing before the Board of Aldermen.

2. *Unapproved Projects.* With respect to any development or development activity determined by the Administrative Officer or his/her designated representative subject to this Article and being carried out without approval, the Administrative Officer is authorized to:

a. *Written notice.* Issue written notice to the owner, specifying the nature and location of the alleged non-compliance, with a description of the remedial actions necessary to bring the project into compliance within a reasonable specified time.

b. *Stop work order*. Issue a stop work order directing the owner to cease and desist all or any portion of the work that violates the provisions of this Section, if the remedial work identified in the written notice is not completed within the specified time.

c. *Non-compliance with stop work order.* Should the owner not bring the project into compliance with the written notice and stop work order, he/she shall then be subject to the penalties described in penalties for violation.

d. *Appeal.* Any notice, order or revocation issued pursuant to Subsections (A)(2)(a), (A)(2)(b) or (A)(2)(c) above shall become final unless the person named therein requests, in writing, no later than ten (10) days after the date such notice order or revocation is served, a hearing before the Board of Aldermen.

B. Penalties

1. *General.* Violation of the provisions of this Article or failure to comply with any of its requirements, including conditions and safeguards established in connection with variances or special use permits, shall constitute a misdemeanor. Any person who violates this Article or fails to comply with any of its requirements shall upon conviction thereof be fined not more than five hundred dollars ($500.00) or imprisoned for not more than three (3) months or both and, in addition, shall pay all costs and expenses involved in the case. Each day such violation continues shall be considered a separate offense.

2. *Corrective Actions.* Nothing herein contained shall prevent the City from taking such other lawful action as is necessary to prevent or remedy any violation. All such costs connected therewith shall accrue to the person responsible.

12.565. Vested Rights

This Article shall not in any way limit or modify the vested rights of any person to complete any development or improvement to lands based upon prior law, where a previous permit or authorization has been granted or applied for and where such previous permit or authorization remains in effect. The City may acknowledge vested rights in other circumstances where it is equitable and just.

12.570. Conflict with Other Ordinances & Codes

In case of conflicts within this Article or any part thereof and the whole part of any other existing or future ordinance or code of the City, the most restrictive in each case shall apply.

12.572.5 Other Ordinances

Any matters concerning stormwater not found in this section may be referenced in appendix F. In case of conflict with this Article and Appendix F, the most restrictive in each case shall apply.

12.575. Other Permits

A. Before starting any work regulated by this Article, an applicant shall comply with the requirements set forth in all other applicable ordinances with respect to the submission and approval of preliminary and final subdivision plats, site plans for construction and rezoning improvement plans and building, grading and zoning permits, along with those set forth in this Article and as may be required by State Statutes and the regulations of any department of State.

B. A discharge permit from the State of Missouri shall be obtained individually or under the applicable general permit for any activity regulated under the Department of Natural Resources Clean Water Commission (10 CSR 20) Stormwater.

12.580. Interpretation

In the interpretation and application of this Article, the provisions expressed herein shall be held to be the minimum requirements and shall be liberally construed in favor of the City and shall not be deemed a limitation or repeal of any other powers granted by State Statutes.

12.585. Abrogation & Greater Restrictions

It is not intended by this Article to repeal, abrogate or impair any existing easements, covenants or deed restriction. However, where this Article imposes greater restrictions, the provision of this Article shall prevail.

12.590. Liability Disclaimer

The performance standards and design criteria set forth herein establish minimum requirements that must be implemented with good engineering practice and workmanship. Use of the requirements contained herein shall

not constitute a representation, guarantee or warranty of any kind by the municipality or its officers and employees of the adequacy or safety of any drainage management structure or use of land. Nor shall the approval of a stormwater management plan and the issuance of a permit imply that land uses permitted will be free from damages caused by stormwater runoff. Larger storms may occur or stormwater runoff heights may be increased by manmade or natural causes. Enforcement of these provisions, therefore, shall not create liability on the part of the municipality with respect to any legislative or administrative decision lawfully made hereunder, nor shall compliance relieve an owner, developer and/or committee from responsibility under any circumstances where liability would otherwise exist.

12.595. Final Approval Required

A. Any stormwater management facility for which a permit has been issued as a part of a subdivision improvement plan must be included with as-built drawings and certified to have been constructed accordingly.

B. Any stormwater management facility for which a permit has been issued individually or as a part of a site development plan must be certified to have been constructed in conformance with the approved drawings prior to issuance of an occupancy permit.

REGULATION OF CONSTRUCTION AND USE OF CITY-MAINTAINED PUBLIC STREET RIGHT OF WAY

2.1 **Purpose**: These regulations are enacted for the purpose of regulating all activity that affects publicly dedicated right of way and publicly dedicated easements maintained by the City of Ashland; for the purpose of establishing the construction standards for roadway acceptance for City funded maintenance; and also for the purpose of regulating all activities including but not limited to demolition, construction and repair activities within city-maintained street right of way and utilities within such rights of way; for the purpose of establishing standards for constructing, maintaining or repairing improvements within the rights of way; and also for the purpose of establishing standards for the use, closure and vacation of City-maintained public rights of way and publicly dedicated right of way that is not maintained by the City.

2.2 **Authority:** These regulations are enacted under authority vested in the City of Ashland, Missouri by §§ 228.110, 228.190, 229.100, 229.300 to 229.370 RSMo, 67.1830 to 67.1846 RSMo, and Section 49.270 RSMo**,** as well as applicable judicial interpretations under these sections.

2.3 **Definitions**: As used in these regulations, unless the context clearly indicates otherwise or the definition of the term is found in a regulation adopted by reference in this regulation, the following words and terms shall have the following meanings:

2.3.1 **Average Daily Traffic (ADT) -** The total volume of traffic during a prescribed time period measured in whole days greater than one day and less than one year, divided by the number of days in that time period which may be further subdivided by specified days of weeks, months, or seasons and may apply to specific geographic areas.

2.3.2 **Board of Aldermen -** The current elected Board of Aldermen.

2.3.3 **City Street or City-Maintained Street** - Any public street for which the City of Ashland, Missouri has assumed responsibility for repair, maintenance or improvement.

2.3.4 **Construction** - The term construction as used in these regulations shall generally mean all work performed within a right of way or on any other property which will affect a right of way which may involve any form of excavation, whether on the surface or below the surface of any right of way, or which may provide or is intended to provide vehicular access to such right of way or which physically affects or can be reasonably expected to physically affect the condition or character of the right of way or use thereof by motor vehicles regardless of whether the activity involving or causing any of the foregoing is for purposes of maintenance, repair or improvement.

2.3.5 **City Engineer** - The City Administrator or a person designated by the City Administrator to perform or cause to be performed professional engineering services for the City of Ashland, Missouri.

2.3.6 **City Administrator** - The official appointed by the Board of Aldermen to be the chief officer of the City in all matters pertaining to highways, streets, bridges, and culverts, under the revised statutes of Missouri and who is in charge of all operations of the City.

2.3.7 **Director** - The Director of the City Maintenance Department or his/her designee for the purpose of administering these regulations.

2.3.8 **Easement** – **Temporary** – A grant by a property owner to the public, or other person or entity over specific tract of land for a specific use or purpose for a specific time frame.

2.3.9 **Easement** – **Permanent –** A grant by a property owner to the public, over specific tract of land for a specific use or purpose of indefinite duration.

2.3.10 **Inspection** - shall refer to the act of inspection by the Director of the City Maintenance Department or his/her designee.

2.3.11 **Licensed Professional Engineer** - A person who is professionally licensed to practice engineering in the State of Missouri.

2.3.12 **Major Thoroughfare Plan –** A roadway classification plan prepared by the City of Ashland and approved by the Board of Aldermen as of July 20, 2004, which specifies the classification of roadways within the Ashland area.

2.3.13 **Neighborhood Improvement District –**An area of the City with defined limits and boundaries which is created by vote or by petition under sections

67.453 to 67.475 RSMo and which is benefited by an improvement and subject to special assessments against the real property therein for the cost of the improvement.

2.3.14 **P & Z Commission -** The current City Planning and Zoning Commission.

2.3.15 **Person** – Any natural person, business entity of any type, corporation, trust, association of any type, governmental entity of any type, or any agent, officer or employee of any of the foregoing.

2.3.17 **Private Driveway** – A roadway used for ingress and egress typically serving a single tract or parcel; or that provides vehicular circulation within a lot.

2.3.18 **Private Street** – A street that is not dedicated to public use serving two or more tracts or lots.

2.3.19 **Public Street** - Any street and its associated right of way that is dedicated to public use and used by the public without regard to whether it is a city-maintained street or otherwise maintained at government expense. A public street need not be a city maintained street as defined in these regulations.

2.3.20 **Right of Way** – All land within a corridor with boundaries defined by use or surveyed description which is established by plat, written deed, easement, instrument of public dedication, or prescriptive use that is used for public roadway purposes and other subordinate permissible uses.

2.3.21 **Street or Street** - That portion of any right of way or private street which is paved, graveled or otherwise surfaced by some means to comprise a street or street for use by vehicular traffic and which is typically identified by a street or street name.

2.3.23 **Subdivision Regulations** - The currently adopted regulations contained within the document formally titled City of Ashland City Code, Chapter 11, Subdivision Regulations.

2.3.24 **Zoning Ordinance -** The currently adopted regulations contained within the document formally titled City of Ashland City Code, Chapter 9, Planning and Zoning.

2.4 **Applicability:** These regulations shall be applicable to the incorporated areas of the City of Ashland, Missouri and area that have entered into pre-annexation agreements.

2.5 **Roadway Classifications:** All roadways within the incorporated areas of the City shall be classified in one or more of the following categories:

2.5.1 **Arterial Street** - Any planned or existing public street right of way 80 feet or more in width and which serves to collect traffic from collector streets which permits or will permit movement of a large volume of traffic from one geographic area to another. Additionally a public street may be classified as an Arterial Street if it carries an ADT of at least 2,500 vehicles or can be reasonably expected to carry the ADT stated above as a result of a proposed development or is so classified by the Major Thoroughfare Plan.

2.5.2 **Collector Street -** Any planned or existing public street right of way of 60 feet or more in width and which functions or is designed to function to collect traffic from local streets and channel such traffic to an arterial or another collector street. Additionally a public street may be classified as a Collector Street if it carries an ADT of 750 to 2,500 vehicles or can be reasonably expected to carry the ADT stated above as a result of a proposed development or is so classified by the Major Thoroughfare Plan.

2.5.3 **Local Street -** Any planned or existing public street right of way 50 feet or less in width and which serves the primary purpose of permitting ingress and egress from residences or other buildings or structures along such street to circulate to and from collector streets. Additionally a public street must carry an ADT of less than 750 vehicles to be classified as a Local Street or is so classified by the Major Thoroughfare Plan.

2.5.4 **Freeway** - Any planned or existing public street right of way 120 feet or more in width with four or more lanes and which serves to collect traffic from arterial streets which permits or will permit movement of a large volume of traffic from one geographic area to another. Additionally a public street may be classified as a Freeway Street if it carries an ADT of at least 5,000 vehicles or can be reasonably expected to carry the ADT stated above as a result of a proposed development or is so classified by the Major Thoroughfare Plan.

2.5.5 **Alley** – Roadway bounded by planned or constructed buildings and accessory structures used primarily to access parking for motor vehicles.

2.5.6 **Private or Non-maintained Streets** - All private streets and publicly dedicated roadways which are not governmentally maintained because they do not qualify for governmental maintenance or for which the City is not required to provide maintenance by law.

2.6 **Public Street Acceptance, Maintenance and Improvement:** Public street rights of way may be accepted for city maintenance in accordance with the following:

2.6.1 **Right of Way Acceptance Procedure** - Street rights of way that qualify for City maintenance shall be accepted for maintenance by the City under the following procedure:

2.6.1.1 **New Street Right of Way** - New street right of way shall be dedicated to public use on a subdivision plat. All new streets to be maintained by the City shall be constructed under permit issued by the City and inspected for compliance with the provisions of these regulations during construction in order to be accepted for maintenance. Streets constructed without such permit shall not be accepted for maintenance unless it is proven at owner or contractor expense that the street was in fact constructed in accordance with these regulations to the satisfaction of the Administrator. "If new street construction for which a permit is required has not commenced within one year of department approval of street plans, the department may require the developer to re-submit plans and construct such street in compliance with current regulations in effect if different from those which were effective at the time the department approved original plans"

2.6.1.2 **New Street Acceptance** - When all streets have been built according to the approved plans and specifications submitted, the Administrator will prepare an order for the City Board of Aldermen recommending acceptance of the roadways. As a condition to acceptance, the City may require the applicant for acceptance to guarantee maintenance of seeding, mulching and other storm water drainage improvements for a period of one year after acceptance and for that purpose may require the applicant to make a cash deposit posting of a performance bond to secure performance of these obligations under such terms as may be deemed reasonable by the Administrator and approved by the Board of Aldermen.

2.6.1.3 **Existing Public Streets** - Public streets existing as of _____, 2005, which have no instrument recorded in the public records showing conveyance or dedication to public use for roadway purposes but which have been used by the public for roadway purposes for a period of 10 continuous years or more may be accepted for maintenance by City , filed of record, so long as such roadways meet current City construction standards or have had a variance, as defined in Section 2.8.4 of these regulations, granted from the strict requirements of the standards provided in these regulations. Other existing public roadways established in accordance with the provisions of Chapter 228 RSMo. or otherwise accepted for city maintenance shall be conveyed to the City for public use forever by means of deed of dedication, quitclaim deed, warranty deed, or easement for all roadway right of way.

2.6.1.4 **Order of Acceptance** - No street shall be accepted for maintenance at the expense of City unless the Board of Aldermen adopts a formal ordinance accepting dedication or other instrument of conveyance and/or

adopts an ordinance accepting such street as a City street for maintenance at City expense. All such ordinances shall be filed of record with the City Clerk. No such streets shall be accepted for maintenance except upon application of a party or parties authorized to dedicate or convey such street to the public use, or in the case of existing street, upon application of an interested party or by the City at its own initiative; applications shall be on forms provided by the Administrator. Any person applying for public street acceptance and maintenance shall be responsible for the necessary expenses in processing such application including land survey and land record recording expenses.

2.6.2 **Street Maintenance** – City-maintained street rights of way and roadway structures within them shall be maintained to the extent that funding is available at the City's expense only if constructed by the City, or if currently maintained at the effective date of these regulations, or if constructed privately in accordance with the standards prescribed by these regulations and transferred to the City in accordance with these regulations, or if privately constructed prior to the effective date of these regulations but do not conform with current requirements, then only if a variance is granted from the particular requirements of these regulations and transferred to the City in accordance with the requirements of these regulations. Notwithstanding City maintenance and control of city street right of way, persons who lawfully own or possess private streets, streets, or driveway ingress and egress which connect to city maintained streets shall be solely responsible for the maintenance and repair of such private streets, streets and driveway ingress and egress to a point which intersects the publicly used and city maintained driving surface of city street and any such work may be performed without a work permit as otherwise required for work within the city maintained street right of way. Except as otherwise authorized in these regulations, no person shall perform any maintenance, repair, or other work within the city maintained street right of way, including work on driveway culverts, ditches, signs, or other structures within the right of way, which are otherwise maintained by and subject to control by the city except pursuant to a duly issued work permit authorized herein.

2.6.2.1 **Drainage Easements and Structures** – Drainage ways within city maintained rights of way and drainage easements and structures accepted by the City for maintenance shall be maintained by the City to the extent funding is available in accordance with City maintenance standards. The City shall not be responsible for repair or maintenance of publicly dedicated or private drainage easements or structures located outside of City maintained street right of way which have not been formally accepted for repair or maintenance by the City. No drainage structure shall be connected to or adversely impact a City

maintained drainage easement or structure without City approval under a work permit issued for that purpose.

2.6.2.2 **School Bus Turn-Around –** School Districts may make special requests for City assistance in creating school bus turn-around. At the request of a school district the City may deliver surfacing material to a specific location and supply grading services, but the City will not pay for surfacing material and if the work involved is adjacent to but not located within publicly maintained right-of–way, a signed Maintenance Work Authorization form will be required from each property owner in which the work will take place.

2.6.3 **Street Improvements** - City-maintained street rights of way and roadway structures within them shall be improved by the City or under its direction and control as deemed necessary by the City to preserve, protect or enhance the public safety and convenience subject to funding made available for this purpose and under such policies as may be adopted from time-to-time by the Administrator. In order to facilitate repairs and improvements to city-maintained street rights of way and roadway structures within them, persons using such rights of way and areas adjacent to them shall abide by the following regulations:

2.6.3.1 **Vehicular Traffic** - The City Maintenance Department may temporarily close, reroute, detour, or otherwise control vehicular traffic and roadway use in and around construction areas for purposes of promoting safety and efficient delivery of services in connection with street repair and improvement projects consistent with any applicable law and traffic regulations enacted by the City.

2.6.3.2 **Utility Use of Rights of Way; Relocation, Repair and Improvement** From and after the date of these regulations, all new and existing utility usage of city-maintained street right of way shall be by general licensed right of use under the authority of the City and subject to the terms and conditions of these regulations. All utility service providers having utilities located in private easements within city-maintained street right of way shall comply with the requirements of these regulations, subject to the provisions for reimbursement for construction and relocation expense provided for herein. The Administrator may require public and private utilities located within city-maintained street rights of way to relocate and/or perform planned repairs or improvements to utilities located within the roadway right of way when necessary for completion of a street repair or improvement project. In such cases, the Administrator shall provide public and private utility service providers affected by any planned street repair or improvement project with engineering plans and a planned schedule for work to be performed within the roadway right of way within a

reasonable time prior to commencement in order to allow all such utility service providers the opportunity to plan for relocating, repairing, or upgrading facilities as a part of, or in coordination with the project, and to obtain necessary permits as required by law or these regulations. Repairs and improvements shall be performed by utility service providers in coordination with the Maintenance Department in order to assure that street repair or improvement work is performed in a timely and efficient manner. When relocation is necessary, utilities shall be relocated within or outside the street right of way as required under the circumstances as determined by the Director of the Maintenance Department in order to complete the project for which the relocation is necessary.

2.6.3.2.1 **Utility Relocation Expense -** The actual expense of relocating public or private utilities in connection with a city-maintained street repair or improvement project, which are located in private utility easement within and predating the city-maintained street right of way, shall be paid by the City. The actual expense of relocating public or private utilities in connection with a city-maintained street repair or improvement project physically located within the city-maintained street right of way without a private utility easement which predates the city-maintained street right of way shall be paid by the utility service provider. When necessary to preserve or promote public safety or convenience, or for reasons of engineering necessity, the Director may require a public or private utility service provider to relocate utilities within the city-maintained street right of way onto private easement outside of the city-maintained street right of way, thereby requiring acquisition of new private utility easement; in such cases, the City upon order of the Board of Aldermen, shall pay such public or private utility the fair and reasonable value of new equivalent easement outside of the public right of way and the fair and reasonable expenses associated with such acquisition. When a utility service provider determines it is necessary to relocate outside of the city-maintained street right of way in connection with a city-maintained street repair or improvement project without requirement by the Director, it may do so at its own expense so long as relocation is accomplished within such time and in a manner which will not hinder or delay completion of the project. The cost of repairing, improving or replacing utilities within a city-maintained street right of way shall be paid by the utility service provider except that the city shall pay the actual expense of repair or replacement of equivalent existing facilities in cases where repair or replacement is necessitated by a city-maintained street repair or improvement project and the utility facilities are located within private easement located within and predating the city-maintained street right of way.

2.6.3.2.2 **Utility Repair and Improvement** - Utilities shall be repaired, improved or upgraded as a part of a street repair or improvement project whenever practicable, and utility service providers having utilities located within the city-maintained street right of way shall promptly notify the Director of needed or planned additions, changes, or improvements to utilities within the area subject to construction, after being given notice of the need for street repairs or improvements scheduled for construction in accordance with Subsection 2.6.3.2.3 below. Whenever utility repairs, improvements, or installations

can be performed as a part of a street improvement project, utility service providers shall nonetheless perform such preliminary work as may be appropriate to eliminate future excavation of and damage to newly paved street surfaces, curbs, gutters, drainage structures and related facilities by installation of conduits, sleeves, manholes and other facilities; failure of a utility service provider to perform preliminary work as a part of or in coordination with city-maintained street repair or improvement project shall be grounds for the denial of a construction permit required by these regulations to perform excavation work at a later date.

2.6.3.2.3 **Mandatory Utility Work** – Utility work such as removal, relocation, or repair of facilities necessary for timely completion of a city-maintained street right of way repair or improvement project shall be performed by utilities in a timely manner so as not to unreasonably delay completion of any such project, provided that the Director provides reasonable advance notice of the need for such work which shall in no event be less than five (5) days as prescribed by law. In the event a utility service provider fails to perform work reasonably necessary for the timely completion of a street repair or improvement project or unreasonably delays performance of such work after reasonable notice of the need for such work as provided for herein, then the Director of the Maintenance Department may perform or contract for the performance of such work with the expense thereof chargeable to such utility service provider, or in cases where it is impracticable for the Director to perform or cause the performance of such work, then the Director may seek an order to compel performance of such work from a court of competent jurisdiction with the expense thereof chargeable to such utility provider.

2.7 **Closure and Vacation of City-maintained Streets:** City maintained streets may be closed or vacated in accordance with the following procedures:

2.7.1 **Street Closure -** City-maintained streets and/or the access points to them may be closed in whole or part in accordance with the traffic regulations of the City. City-maintained streets which in the judgment of the Director are no longer used by the traveling public or which were at one time city-maintained streets but are currently used only as a means for private ingress and egress may be closed to public use, except for authorized persons, for the purpose of effecting statutory vacation by means of abandonment. The closure of a city-maintained street shall not affect the title to real estate unless and until such street is vacated.

2.7.2 **Vacation of Public Streets -** Public streets shall be vacated as authorized by law and applicable regulations of the city. The city shall notify all public and private utility service providers known or discovered to use the right of way proposed for vacation prior to final action thereon. Public streets may be vacated with title thereto reverting to abutting property owners in accordance with the following procedures:

2.7.2.1 **Subdivision Streets** - Streets and rights of way located in platted subdivisions may be vacated in accordance with the requirements of the Revised Statutes of Missouri.

2.7.2.2 **Other Public Streets** - Other public streets located in the City, which are not located within platted subdivisions shall be vacated in accordance with the provisions of § 228.110 RSMo. upon petition or by means of abandonment due to non-use by the public under § 228.190 RSMo.

2.8 **Construction Standards:** All construction work performed within rights of way shall conform to the following standards applicable to the type of work performed:

2.8.1 **New Construction** - All new public streets, existing roadways and storm water projects that are to be maintained by the City shall be constructed or improved under permit issued by the City in accordance with the standards and specifications set forth in **Appendix A** of these regulations and **Appendix D** for plan submittal requirements. No street shall be accepted as a public street to be maintained at city expense unless it meets or exceeds the requirements set forth in **Appendix A** or unless specific variances are granted to the requirements set forth in **Appendix A** of these regulations. In either case, all utilities to be located within the rights of way shall be installed before City acceptance unless otherwise authorized by the Director.

2.8.2 **Driveway Locations and Culverts** - All driveway accesses and culverts shall be installed in accordance with the procedures and standards set forth in **Appendix B** of these regulations.

2.8.3 **Utility Pavement Cuts** - All non-emergency cuts within pavement, curbs, gutters, shoulder or drainage areas shall be made in accordance with plans and specifications approved by the Director as set forth in **Appendix C** of these regulations.

2.8.4 **Variances** - A variance from the strict application of the requirements set forth in the Appendices of these regulations may be granted upon a written application to the Administrator setting forth the specific variance(s) desired, planned substitutes and the reasons and justifications for the variance(s). Written applications for variances must be submitted by the holder of or applicant for a construction permit to the Administrator and scheduled for consideration by the Board of Aldermen in accordance with the provisions of 2.16 of these regulations. Any variances tabled and/or not acted upon within 60 days shall be deemed denied. Variances shall be tabled for no more than 60 days from the initial review.

2.9 **Construction Permits:** All construction activity shall be carried out pursuant to work permit issued by the Director. No person shall perform any construction within a right

of way for any purpose except upon issuance of and in conformity with a permit issued by the Director pursuant to the provisions of these regulations: provided, however that construction work within private easements located within or adjacent to city maintained street right of way which does not alter or damage street surface, street drainage ditches or structures, signage or other street improvements and which will not interfere with street traffic shall not be subject to the permit requirements contained herein. The issuance of a permit in accordance with these regulations does not relieve the permittee of the responsibility to properly plan, design, construct, install, modify, or maintain the construction or the area in which construction is authorized pursuant to the permit. Issuance of the permit shall not relieve the permittee from compliance with any other applicable laws, rules or regulations, including but not limited to identification or location of underground utilities, compliance with erosion control standards, pollution control standards or Floodplain Management Ordinance Chapter 13 of the City Code.

2.9.1 **Permit Requirements** - Any person seeking a permit for construction within a right of way shall submit a written application on forms provided by the Director. The Director in his discretion may issue general or blanket permits for specific recurring categories of construction activities under such terms and conditions and for such duration as the Director deems appropriate under the terms and conditions of these regulations. **(In the case of new street construction, see 2.8.1 New Construction)**

The Director may require plans and specifications in support of an application for permit to be prepared or approved by a qualified and registered engineer to preserve and promote the public health and safety. All permit applications, including plans and specifications submitted in support thereof, shall demonstrate in writing and graphically, as appropriate, that the proposed construction activity is or will be in compliance with the requirements of these regulations. All permit applications other than for private driveway culverts, blanket permits, and permits issued under special cooperative agreement, shall be submitted to the Director at least thirty (30) in advance of the proposed date of construction except in cases of emergency as provided in **Section 2.9.3.4**.

The Department shall review and respond to all permit applications for construction activity other than the installation of driveways, blanket permits, or permits issued under special cooperative agreements, within twenty-one (21) days of receipt of the application and supporting materials: provided, however, the Director may extend the time for response to a permit application in extraordinary circumstances in order to address engineering or public safety issues arising from a permit application.

For driveway permits, see **Appendix B**.

A permit may be issued with modifications accompanied by written reasons for such modifications. A permit may be denied if the Director finds that the construction as proposed will endanger the public safety or will result in permanent degradation of the right of way, or if the permittee on one or more occasions has failed to engage in or complete construction activities in accordance with the requirements of these regulations or has failed to properly maintain the right of way subject to the permittee's construction permit within the time provided for by these regulations.

Any permit which is issued with modifications or which is denied shall be subject to review by the Board of Aldermen provided the applicant files a written appeal to the Board of Aldermen on forms provided by the Director within ten (10) business days of a permit issuance with modifications or permit denial.

The Board of Aldermen shall upon timely and proper appeal determine the facts and issues pertaining to the appeal and render its decision thereon in writing. Any further appeal shall be in accordance with the provisions of Chapter 536 RSMo.

2.9.2 **Construction Inspection** - All construction activity under authorized permit shall be inspected during construction and upon completion of construction activity by the City Maintenance Department. No portion of the right of way subject to construction shall be used by the public or be open to public vehicular traffic until approved after final inspection. No excavation or boring shall be covered or filled in unless authorized by the Director or his designee upon inspection. Inspections hereunder may be waived by the Director in cases where the permittee provides adequate assurances that all construction activity has been performed in accordance with approved plans and specifications under the construction permit or the work performed under construction permit is otherwise subject to review for conformity with the requirements of these regulations and is found to be in compliance herewith.

2.9.3 **General Permit Conditions** - Construction permits shall be issued upon submission and approval of a permit application and payment permit fees and charges for recoupment of right of way management costs as authorized by ***section 67.1832 RSMo and established*** from time-to-time by the City as otherwise provided in these regulations. In addition, the following general conditions shall be applicable to all permits.

2.9.3.1 **Expiration of Permit** - Any permit issued hereunder shall expire on the date specified by the Director in the permit or as specified in the application for permit if not specified by the Director, or in the absence of specification, within ***ninety (90) days*** after issuance unless the Director has extended the permit in writing. Permits may be extended for good cause for a period not to exceed ***ninety (90) days*** after the initial period of validity provided there have been no changes in plans for construction and construction occurs within the time period authorized by the permitted extension. No permit shall be renewed except by written endorsement of renewal of the permit by the Director prior to expiration. Failure to request or obtain renewal prior to expiration shall require the permittee to submit an application for a new permit.

2.9.3.2 **Transfer of Permit** - Permits may be transferred only with approval of the Director for good cause and proof that transferee is capable of performing all work under the permit in compliance with these regulations. All terms and conditions of permits shall be automatically applicable to any successor permittee.

2.9.3.3 **Permit Suspension and Revocation** - The Director may deny, suspend or revoke a permit for construction reasonable written notice to the permittee stating the reasons for denial, suspension or revocation and stating what corrective actions and time frames, if any, are necessary to obtain approval or avoid suspension or revocation when practicable under the circumstances. A construction permit may be denied, suspended or revoked due to material non-compliance with the terms of the permit or these regulations, unapproved modifications in design or construction, false or inaccurate information submitted with the application for permit, change in site conditions which will result in violation of one or more provisions of the permit, permittee failure to complete work within the time or under standards authorized or required by the permit, permittee failure to maintain construction after completion when required to do so, permit misrepresentation concerning compliance with these regulations, or any other reasons necessary for the protection of the public safety or preservation of public property. A permit may be suspended summarily with notice to the permittee when necessary to preserve the public safety. Permit suspension or revocation shall be subject to written appeal to the Board of Aldermen if the appeal is filed within 5 business days of denial, suspension or revocation and shall be heard and determined by the Board at their next regularly scheduled meeting or special meeting called by the Board. An appeal shall not stay suspension or revocation of a permit unless so ordered by the Board upon a showing of good cause or with the consent of the Director. The Board shall determine the appeal of any suspension or revocation as soon as reasonably practicable and shall issue written findings of fact and

conclusions of law in support of the decision; the decision of the Board shall be final and any further appeal or review shall be as prescribed by ***Chapter 536 RSMo.***

2.9.3.4 **Emergency Repair Exemption** - Utility service providers may perform unplanned work within city-maintained street rights of way without issuance of construction permit or prior notification or approval of the Director of Maintenance in cases of emergency or other exigent circumstance; provided, however, that the utility service provider shall report the occurrence, location, date and scope of emergency work as soon as reasonably practicable but not less than two business days following such work. All exempt emergency repair work shall be performed in accordance with the requirements of **Appendix C** of these regulations.

2.10 **Street Name and Regulatory Signs**: Streets shall be signed along private and publicly maintained streets under the following provisions:

2.10.1 **Street Name Signs** - In order to promote and protect the safety of the public at large the City through the Board of Aldermen may assign names to all city-maintained streets pursuant to these regulations and all private streets under the zoning regulations of the city, and may place uniform street name signs at the intersections of all such streets in order to facilitate the efficient delivery of emergency public health and safety services except internal roadways in privately maintained subdivisions. Except as authorized by these regulations, no person shall name or change the name of any street, nor install, place or remove or replace any street or street name sign on any such street except duly authorized agents of the City upon order of the Board of Aldermen.

2.10.2 **Regulatory Signs and Traffic Control Devices** - The City through the Maintenance Department shall have the exclusive authority and control over the placement and maintenance of signs regulating traffic and traffic control devices on city-maintained street right of way. No person shall place any sign regulating traffic or other traffic control device, nor any sign or other structure on any city-maintained street right of way without the express written consent of the Director. No street or street within a subdivision shall be accepted for maintenance by the City unless the owner or developer of streets or streets within such subdivision submits a traffic control and signage plan prepared and sealed by a licensed engineer and which is approved by the Director unless submittal of such plan is waived by the Director for good cause shown. All regulatory signs to be installed in accordance with an approved traffic control plan shall be purchased and installed by the owner or developer of streets or streets within a subdivision in accordance with City regulations and standards prior to any such streets or

streets being accepted for maintenance by the City. The Maintenance Department shall remove any sign, traffic control, or other traffic control device or other structure placed in the right of way without permission from the Director. The City shall not place, install or maintain any sign regulating traffic or other traffic control device upon any private street or any publicly used roadway, which is not maintained by the City except where a privately maintained roadway intersects with a publicly maintained roadway. See Appendix H for Sign Specifications.

2.11 **Brush and Vegetation Control:** Persons owning real estate adjacent to City publicly maintained street right of way may cut and clear brush and mow grass and other vegetation at their own expense within City maintained roadway right of way adjacent to their property and within 30 feet of their driveways within such right of way or as determined by **Appendix B**, **1.5 Sight Distance for Driveways**. All such work shall be performed without liability for personal injury or property damage on the part of the City to persons performing such work or others who may be affected thereby. All property owners performing such work shall be solely responsible for determining the location of public right of way and for the safe conduct of work and operation of vehicles and equipment and for the removal of trash and debris. No trees over the diameter of six (6) inches measured on the trunk three (3) feet above the ground shall be cut down without the express approval of the Director or his/her designee. All work shall be performed in a manner which prevents natural or man-made obstruction to the visibility of persons using the right of way, prevents erosion to right of way and does not otherwise detrimentally affect the public right of way. Persons desiring to cut or clear trees or brush or mow grass or vegetation within public rights of way which are not adjacent to property owned by them may do so only upon issuance of a written permit authorized by the Director upon such terms and conditions set forth in such permit.

2.12 **Bonds:** The Director may require any permit applicant to furnish bond in the form of cash, surety or other approved deposit in such sum sufficient to secure repair and restoration of right of way in the event the applicant for permit fails to perform the obligations under the permit including final maintenance of the construction site after completion as required by these regulations. Such deposit or bond also may be conditioned upon the applicant maintaining a repaired or restored portion of the right of way under construction permit for a period of twelve (12) months from the completion and require the applicant to hold the City harmless from any costs and expense occasioned by or resulting from the use of such right of way during that time period. In addition, the Director may require any utility company or provider to post a general bond in such amount determined by the Director based on any reasonable formula which adequately secures the utility's performance over a time period based on the frequency, nature and extent of excavations made by such utility.

2.13 **Penalties and Remedies for Violations:** Any person who violates any requirement or provision of these regulations shall be deemed guilty of a misdemeanor pursuant to §

229.370 RSMo. and punished therefore as prescribed by law. Any person who violates any requirement or provision of these regulations may, in addition to any criminal liability thereof, be civilly liable to the City by way of restitution for such sums and costs the City incurs in repairing or restoring any right of way under construction permit or otherwise if the Director gives notice of violation to the permittee by personal delivery or regular or certified mail and a specified time to cure. Such notice shall advise the permittee of the deficiencies in work and violations of regulations hereunder and advise the permittee that the permittee shall be required to make appropriate restoration or repair within the time stated in the notice and such permittee shall be required to guarantee all such work for twelve (12) months after restoration or repair is made. In the event the permittee fails to perform the work required by the notice within the time specified by the notice, or fails to guarantee the work after it is performed, then the City may perform or cause to be performed all remedial measures and charge the expense thereof to the permittee which expense shall be chargeable against any bond or cash deposit made by the permittee, or may be recoverable by action filed in the Circuit Court of Boone City, Missouri, for restitution for all such expenses so incurred as well as the cost of enforcement.

2.13.1 **Authority of City Administrator:** Whenever the use, convenience or necessity of the public shall require it, the City Administrator shall have the authority to order the owners or agents in charge of property adjacent to which curb cuts, sidewalks, curbs, or driveways are maintained upon the public streets or rights-of-way, to alter such improvements in such manner as he shall find reasonably necessary under the circumstances, if such improvement fails to conform to the aforesaid standard plans and specifications. The director shall allow a reasonable period of time for such alteration to be made. It shall be unlawful for any person to maintain such nonconforming curb cut, sidewalk, curb or driveway after the expiration of such time.

2.14 **Fees:** The City may uniformly impose right of way management fees and charges as authorized by section 67.1840 RSMo and as established and approved by the City. Any person who is aggrieved by the imposition of any right of way management fee or charge and reasonably believes that any such fee or charge is not in conformity with section 67.1840 RSMo may have any such fee or charge reviewed by the Board of Aldermen upon application if such application is filed within five (5) business days of the imposition. In the event a timely application is filed with the City, it shall review the matter as soon thereafter as is practicable and issue its decision and findings of fact and conclusions of law in support of its decision, and may further order any change in its fees and charges deemed appropriate. The filing of an application for review of fees and charges imposed under section 67.1840 shall not relieve a person of the obligation to pay fee or charge imposed, but upon review, the Board may order a refund of any fees or charges imposed , or portion thereof, if found not to be in conformity with section 67.1840**.** Any further review of the Board's decision shall be as provided for in chapter 536 RSMo.

Fees for Right-of-Way Permits for driveways and utility work shall be $25.00. Fees for construction activity will be estimated by the Director and deposited with the City. The Director will maintain an accurate account of City expenses related to the construction permit and will charge the account according. Upon completion of the project with acceptance of improvements by the City, the Director will prepare a final billing for the project. The difference will be refunded to the permittee if the project comes in below the estimate. The difference will be billed and paid by the permittee prior to City acceptance if the project comes in above the estimate.

2.15 **Cost of Construction:** The cost of all construction activities within City right of way performed under city issued permit shall be incurred and paid by the permittee. In addition, whenever the Director deems it necessary for the public safety, health or welfare, and a part of necessary repair, maintenance or improvement work within City right of way, the Director may give all utility providers notice of the need to remove, change, or alter utilities within the right of way as specified in § 229.350 RSMo. and these regulations. All such notices shall be given as soon as practicable when the need for utility movement, relocation, or change is necessary but in no event shall notice be given in less than five (5) days prior to the date needed for such work.

2.16 **Jurisdiction:** These regulations apply to all street Right of Way to be accepted for maintenance by the City and City maintained right of way in all incorporated and unincorporated areas by agreement except streets in areas within the jurisdiction of any special street district organized and operating under the provisions of chapter 233 RSMo.

2.17 **Effective Date:** These regulations shall become effective from and after the date the City of Ashland Board of Aldermen passes an ordinance adopting these regulations.

APPENDIX A

DESIGN SPECIFICATIONS FOR NEW STREET CONSTRUCTION

1. GENERAL SPECIFICATIONS

1.1 **Specifications:** Plans shall be prepared by a professionally registered engineer duly authorized to conduct business in the State of Missouri.

1.2 **All Street Construction: All** newly constructed streets, sidewalks and storm drainage shall conform to the typical drawings shown in **Appendix B-1.** The geometric requirements for street construction can be found in **1.10, Table A** of this section. See **Appendix A-1** for Construction and Materials Specifications and **Appendix D** for Plan Submittal Requirements.

All new streets shall be concrete curb and gutter. Large lot developments with lots being two and one half (2 ½) acre or more may include low impact development design features including but not limited to concrete or asphalt streets <u>without</u> curbs and gutters.

All new street systems shall be constructed with street intersecting at no less than 80 degrees and no more than 100 degrees to each other.

All street without curb & gutter shall have a 24-inch v-bottom ditch <u>(minimum depth, based on a 15-inch diameter CMP)</u> with 3:1 in slopes <u>(minimum)</u> and 3:1 back slope (minimum). All ditch flow lines with grades of 3% or greater must have erosion control blanket installed. Blanket must be centered on flow line. If ditching is unnecessary on a section of street, the slope from the edge of the street or shoulder shall be no less than 3:1. This rule shall also apply to the slope beginning at the back of curb on curb and gutter street, which do not require sidewalks.

All street where the slopes are less than these minimums may require guardrail. The design engineer shall refer to figure 5.1 on page 5-3, Chapter 5 of the 1996 AASHTO Streetside Design Guidelines to determine whether guardrail is necessary based on slope and height of embankment. If guardrail is necessary it shall be placed such that the face of the guardrail is at either the back of curb or the edge of the shoulder and a 2 foot clear zone shall exist with the same slope as the shoulder or curb section behind the guardrail assembly.

All newly constructed street with no outlet shall end in a cul-de-sac, either permanent or temporary, unless the street is less than 100 feet long and less than 2 subdivision lots in depth. Street that are to be extended may end in temporary cul-de-sacs at the discretion of the Director. See **Drawings 110.08 –110.11** for cul-de-sac information.

Layout and Alignment. All subdivision streets shall be arranged to provide for the continuation of existing streets in adjoining subdivisions and, to the extent possible, the anticipated projections of streets through adjoining unsubdivided or undeveloped property to allow for convenient movement of vehicular traffic and the orderly development of adjoining property and shall adhere to the Master Street Plan where applicable.

Street jogs with center line offsets of less that one hundred twenty-five feet (125) shall not be permitted.

When a new subdivision adjoins undivided lands, susceptible to being subdivided, the new streets shall be carried to the boundaries of the tracts proposed to be subdivided at a later date and a temporary cul-de-sac shall be installed at this point.

Permanently designed dead end cul-de-sac streets shall not be longer than eight hundred (800) feet and shall be provided with a turn-around at the closed end.

All streets in exact or approximate alignment with existing named streets shall bear the names of such existing named streets. All other streets shall be assigned names which do not conflict with names of existing streets. Postal addresses for each lot shall be assigned by the City Administrator.

Whenever there exists a platted half street or half alley adjacent to land platted for a subdivision, the remaining half of the street or alley shall be provided for on the plat of the subdivision.

Utility easements shall be at least ten (10) feet wide along the outside of each new or existing street right-of-way. Wider easements may be required where multiple utilities are located in the same easement.

1.2.1 **Streets and alleys; Minimum and Maximum Block Lengths**

The minimum and maximum block lengths shall be as follows:

Type	Minimum	Maximum
Arterial	300'	1000'
Collector	300'	1000'
Local	Administrative	1000'

	Approval	

1.2.2 **Streets Widths and Parking**

Classification	Right of way Minimum	Paved Surface Minimum	On Street Parking Allowed?*
Local	50'	28'	No
Local	50'	32'	One Side Both Sides
Collector	60'	32' 38'	One Side Both Sides
Artery	80'	38'	No

* When an owner elects to restrict on street parking, all signs indicating the same must be provided by the owner/developer.

1.3 **Alleys:** Alleys, where allowed by the Subdivision Regulations, shall be 22 feet in width with a thirty-foot minimum right-of-way. In all other respects, alleys shall conform to the pavement cross-section and geometric requirements for a local street.

1.4 **Sidewalks:** Sidewalks, where required by the Subdivision Regulations, shall be built according to **Appendix A-1**, **Section 234** and **Appendix B, Drawings 420, 430, 431, 432, 433 and 435.**

1.4.1 **Abandoned driveways:** All abandoned driveways on such premises shall be eliminated and new curbs, gutters and sidewalks shall be constructed in accordance with design standards included in the City's standard plans and specifications referred to in this Appendix.

1.4.2 **Handicapped ramps required:** Whenever a permit is issued to construct, reconstruct, repair, alter or grade any sidewalk curb, curb cut, driveway or street, handicapped ramps shall be required to be installed in accordance with design standards included in the city's standard plan and specifications at all curb and driveway crossings to be constructed, reconstructed, repaired or altered; provided that the City Administrator may waive said requirement if he determines that requirement of handicapped ramps is impractical under all the circumstances. (Source Ord. 2002-037 7-9-02)

1.5 **Mailbox/Structures/Obstructions/Objects Within Right-of-Way:** No mailbox or newspaper delivery box (hereafter referred to as mailbox) or structures / objects will be permitted within the City right-of-way which interferes with the safety of the traveling public or the function, maintenance, or operation of the street system.

1.5.1 **Mailbox Location:** No mailbox shall be located in a place where vehicular access to it is prohibited by law or regulation. Mailboxes shall be located on the right-hand side of the street in the direction of the delivery route. The bottom of the box shall be set at an elevation established by the U.S. Postal Service, usually between 42" and 48" above the street surface. The streetside face of the box shall be offset from the edge of the traveled way or face of curb, a minimum distance of 8" and shall not exceed 12". Notwithstanding these requirements the location and construction of mailboxes shall conform to the rules and regulations of the U.S. Postal Service. A mailbox installation that does not conform to the previsions of the regulation is an unauthorized encroachment under section 229.030, RSMo.

Mailbox installation that conforms to the following criteria will be considered acceptable unless in the judgement of the Director the installation interferes with the safety of the traveling public or the function, maintenance, or operation of the street system.

1.5.2 **Shoulder and Parking Area Construction:** It will be the responsibility of the postal patron to inform the Director of any new or existing mailbox installation where shoulder construction is inadequate to permit all-weather vehicular access to the mailbox.

1.5.3 **Removal of Nonconforming or Unsafe Mailboxes / Structures / Obstructions / Objects Within Right-of-Way:** Upon notification by the Director, the owner of property containing a mailbox or other structure, object or vegetation that is found to violate the requirements of these standards or otherwise obstruct the public right of way shall be considered an unlawful encroachment and shall be subject to removal by the Department. At the discretion of the Director and based on an assessment of hazard to the public, the Director or his designee shall give the property owner or other person responsible for the unlawful encroachment not less than 24 hours, nor more than 30 days, written notice to remove or eliminate such encroachment from the right of way. If such encroachment is not removed or eliminated within the time specified in the notice, the Department may remove the encroachment from the right-of-way.

No structure, object or vegetation which impedes sight distance from traffic or regulatory signs shall be permitted in the area between the curb and sidewalk, or edge of a street or its shoulder and ditch line, or otherwise placed or planted within the right-of-way.

1.5.4. **Maintenance Repairs/Reconstruction:** Persons who own or are responsible for the placement of mailboxes or other structures, objects, trees and other landscaping within the right of way shall be obligated to

relocate or remove or eliminate any such item if necessary for performance of right of way maintenance or repairs or reconstruction. The Director shall give such persons a minimum of 48 hours notice to remove any of the above-mentioned items before work begins unless work is deemed an emergency.

1.6 **Unauthorized Use of City Maintained Street Right of Way:**

The deposit without prompt clean-up or removal of mud or debris, or the storage of equipment or construction materials on city maintained streets without a right of use permit is prohibited. Any person who engages in this prohibited activity, may be issued a Notice of Violation (NOV) by the Police Department and thereafter the responsible party shall remove such mud, debris, equipment, or construction materials specified in the NOV within 24 hours unless violation is deemed an emergency, then removal shall occur immediately. In addition to any other remedy which may be provided by law or regulation, noncompliance with such notice may result with the City Maintenance Division removing or having removed such mud or debris and the cost of such removal shall paid by the responsible party. If the responsible party cannot be identified, the owner of property from which mud or debris originated (if identifiable) will be held responsible and will be issued a NOV. If mud or debris is deposited on street due to erosion, the owner of property, developer, or both, shall be deemed responsible and may be issued a NOV.

If contractor(s) wish to use city right-of-way or street as a staging area during construction activities, a Right of Use Permit will be required as per **Appendix C** of this regulation. A Right of Use Permit will be issued if it is determined that the activity will not interfere with the safety of local traffic. A Contractor issued such a permit must comply with directions of permit or permit will be canceled and NOV will be issued.

1.7 **Minimum Pipe Size:** All storm water culvert pipes shall be a minimum of 15 inches in diameter, except that, if it is shown by the property owner to the satisfaction of the City Engineer that a smaller pipe size is justified for a particular driveway culvert, a smaller pipe size for the culvert may be allowed. An engineering analysis provided by the requesting party may be required by the City for any reduction the minimum pipe size. All storm water culvert pipes under street shall be a minimum of 18 inches in diameter and shall be installed to meet or exceed the manufacturers recommendations for trench width, preparations, embedment and backfill. (amended 7-15, 2014, Ordinance No. 985)

1.8 **Materials Allowed (Culverts):** Reinforced Concrete Pipe (RCP), Corrugated Metal Pipe (CMP) and High Density Polyethylene (HDPE) .

Street Culverts	RCP and CMP. CMP shall be both zinc and polymeric coated.

Storm Sewer Culverts	RCP, CMP and HDPE.
Pipe End Sections	RCP shall have Flared End Sections and CMP shall have 3:1 mitered ends. See Appendix B-1, Drawing 525.03

All pipes shall be used and installed in conformance with the manufacturer's specifications and guidelines. **Erosion control blanket shall be applied at all street inflows and outflows of each pipe if rip-rap is not required.** The Erosion Control Blanket shall be the width of material and a minimum of 6- feet in length. See **Section 260** of **Appendix A-1** for Culvert Construction and Material Specifications. For driveway procedures, see **Appendix B**.

1.9 EROSION, SEDIMENT AND STORMWATER CONTROL PLAN

1.9.1 **Introduction** - This section sets forth the requirements of submitting an erosion and sediment control plan in dealing with the control of non-point source (NPS) pollution. All development and street plans submitted for approval to the City must be accompanied by an erosion and sediment control plan as set forth in these regulations.

1.9.2 **Definitions**

1.9.2.1 **Certified Contractor** - An individual who has received training and is licensed by (State or Local Environmental Agency) to inspect and maintain erosion and sediment control practices.

1.9.2.2 **Clearing** - Any activity, which removes the vegetative surface cover.

1.9.2.3 **Drainage Way** - Any channel that conveys surface runoff throughout the site.

1.9.2.4 **Erosion Control** - Measures that prevent erosion.

1.9.2.4 **Erosion and Sediment Plans** - A set of plans prepared by or under the direction of a licensed professional engineer

1.9.2.5 **Control Plan** - indicates the specific measures and sequencing to be used controlling sediment and erosion on a development site before, during and after construction.

1.9.2.6 **Grading** - Excavation or fill of material, including the resulting conditions thereof.

1.9.2.7 **Perimeter Control** - A barrier that prevents sediment from leaving a site either by filtering sediment-laden runoff, or diverting it to a sediment trap or basin.

1.9.2.8 **Phasing** - Clearing a parcel of land in distinct phases, with the stabilization of each phase before the clearing of the next.

1.9.2.9 **Sediment Control** - Measures that prevent eroded sediment from leaving the site.

1.9.2.10 **Site** - A parcel of land, or a contiguous combination thereof, where grading work is performed as a single unified operation.

1.9.2.11 **Stabilization** - The use of practices that prevent exposed soil from eroding.

1.9.2.11 **Start of Construction** - The first land-disturbing activity associated with a development, including land preparation such as clearing, grading and filling; installation of streets and walkways; excavation for basements, footings, piers or foundations; erection of temporary forms; and installation of accessory buildings such as garages.

1.9.2.12 **Watercourse** - Any body of water, including, but not limited to lakes, ponds, rivers, streams, and bodies of water which delineated by City.

1.9.2.13 **Waterway** - A channel that directs surface runoff to a watercourse, or to the public storm drain.

1.9.3 Requirements of the Erosion and Sediment Control Plan

All persons who disturb land that would result in the requirement to obtain a Land Disturbance Permit per the Missouri Department of Natural Resources (MoDNR)- Water Pollution Control Program, must submit a copy of Form G- Application for Storm Water Permit and Form E- General Permit: Land Disturbance; along with the Storm Water Pollution Prevention Plan (SWPPP) to the City for review. If the MoDNR approves the application, a copy of the approval letter must be forwarded to the City.

If the disturbance is less than five (5) acres and does not require application to the MoDNR for permit approval, but greater than one (1) acre, an erosion and sediment control plan must be submitted to the City for approval. The plan should include a listing of the most effective and practical best management practices (BMPs) designed to minimize

pollution resulting from storm water runoff and off-site sediment deposition during land disturbance activities. The plan should be organized and presented in a clear, concise manner with sufficient design and background information included to facilitate review by the City and other reviewing personnel. In general, an acceptable erosion, sediment, and storm water control plan should contain as a minimum:

1.9.3.1 **A brief narrative to include:**

1.9.3.1.1 Project description (purpose, size of area to be disturbed, and location).

1.9.3.1.2 Before and after site description (topography, principal drainage way for the site, land cover condition, percent of impervious area, and the associated increase of runoff volume from a 25-year 24-hour storm event).

1.9.3.1.3 Adjacent property. (This should include the identification of land use and cover conditions.)

1.9.3.1.4 Soils descriptions.

1.9.3.2 **Planned Best Management Practices to include:**

1.9.3.2.1 Beginning and completion date of construction activities.

1.9.3.2.2 A sequence of all construction-related BMP and vegetative activities. Include any winter shutdowns.

1.9.3.2.3 A pre-construction conference is recommended and should be scheduled one week prior to land disturbance to orientate contractors to the erosion, sediment, and storm water control plan. Notice of the pre-construction conference date should be provided to the City one week prior to the meeting.

1.9.3.2.4 A listing of erosion and sediment control BMPs to minimize pollution during construction along with location and installation schedule for each.

1.9.3.3 **Operation and Maintenance (O&M) plan for BMPs.**

1.9.3.3.1 Temporary measures: a plan for the schedule of maintenance during construction along with any operational criteria.

1.9.3.3.2 Permanent measures: a plan for the long term maintenance and operation including entities responsible, financial obligations for continued O&M, designated access for maintenance, and schedule of O&M activities.

1.9.3.3.3 Maintenance during and after construction may include practice re-establishment, repair, sediment removal, mowing, etc.

1.9.3.4 **Detailed drawings and specifications of BMPs with supporting calculations**

1.9.3.4.1 Detailed drawings can be utilized along with standard engineering drawings of structures and measures so long as site specific elevations, dimensions, etc., are shown on drawings. A recommended resource is the field manual entitled "Protecting Water Quality", available through the MoDNR Technical Assistance Program.

1.9.3.4.2 Support data and calculations should be sufficient to allow reviewers to reproduce design procedure of structures and measures. Sources of information should be cited.

1.9.3.4.3 One permanent benchmark should be clearly labeled on drawings. If elevations are tied to a USGS benchmark, description and elevation of benchmark will be provided.

1.9.3.5 **Vicinity USGS Quad Map -** This map should identify the location of:

1.9.3.5.1 Land disturbing activity.

1.9.3.5.2 Site storm water discharge.

1.9.3.6 **Site Topographic Map -** This will provide pre-construction site topography while locating drains, property lines, construction work limits, and any utilities. Scale will be no less than 1"=60'. Trees to be preserved will be located on this map.

1.9.3.7 **Site Development Map**- This map should identify the location of buildings and associated paved areas, raw materials or finish product stock pile areas, equipment storage areas, processing areas, construction entrances, access or haul streets, and finished grades on a duplicate of the site topographic map. See **Appendix E** for sample checklist for site plan map preparation.

1.9.3.8 **Site erosion, sediment, and storm water control map -** This map should identify the location of all the BMPs (temporary and permanent) on a duplicate of the site topographic map along with

the location of all permanent construction and associated paved areas and finished grades.

1.9.3.9 **Name, address, and telephone number** of the contact personnel responsible for developing and implementing the plan.

1.9.3.10 **A continuing education plan** for all employees to inform them of plan requirements is recommended.

1.9.3.10.1 As work progresses and various subcontractors and/or new employees are brought into the work site, each should be familiarized with plan. At the beginning of each workweek, scheduled items of the plan to be implemented during that week should be brought to the attention of the impacted work force.

1.9.3.10.2 For post construction assurance and responsibility, operation and maintenance training will be provided to personnel responsible for continued operation of the plan after the project is completed. This should include an annual review of schedule for maintenance activities.

1.9.4 **Inspection**

1.9.4.1 City Director or designated agent shall make inspections as hereinafter required and shall either approve that portion of the work completed or shall notify the contractor wherein the work fails to comply with the erosion and sediment control plan as approved. The approved Plans for grading, stripping, excavating, and filling work bearing the stamp of approval of the City shall be maintained at the site during the progress of the work. In order to obtain inspections, the contractor shall notify the department at least two (2) working days <u>before</u> the following:

1.9.4.1.1 Start of Construction

1.9.4.1.2 Erosion and sediment control measures are in place and stabilized.

1.9.4.1.3 Site Clearing has been completed

1.9.4.1.4 Rough Grading has been completed

1.9.4.1.5 Final Grading has been completed

1.9.4.1.6 Close of the Construction Season

1.9.4.1.7 Final Landscaping

1.9.4.2 The contractor or his/her agent shall make regular inspections of all control measures in accordance with the inspection schedule outlined on the approved erosion and sediment control plan(s). The purpose of such inspections will be to determine the overall effectiveness of the control plan, and the need for additional control measures. All inspections shall be documented in written form and submitted to the Director at the time interval agreed to at the pre-construction meeting. See **Appendix E** for a sample checklist for site inspection purposes.

1.9.4.3 The Director or his/her designated agent shall enter the property of the applicant as deemed necessary to make regular inspections to ensure the validity of the reports filed under Section 1.9.4.2 above.

1.9.5 **Enforcement**

1.9.5.1 In the event that any person holding a set of approved erosion and sediment control plans pursuant to these regulations, violates the terms of these regulations, or implements site development in such a manner as to materially adversely affect the health, welfare, or safety or persons residing or working in the neighborhood or development site so as to be materially detrimental to the public welfare or injurious to property or improvements in the neighborhood, the Director or his/her designee, may suspend or stop the site development work progress.

1.9.5.2 No person shall construct, enlarge, alter, repair, or maintain any grading, excavation, or fill, or cause the same to be done, contrary to or in violation of any terms of these regulations. Any person, partnership, or corporation violating any of the provisions of these regulations, shall be subject to bearing all costs of penalties and damages associated with the applicable provisions prescribed by law.

1.10 **DESIGN CRITERIA FOR STORM WATER DRAINAGE FACILITIES** See **Appendix F**

1.11 **STREET CONSTRUCTION STANDARDS** - All new streets constructed within the City shall be constructed in accordance with the specifications and standards as shown in **Table A** of this section.

TABLE A

STREET CONSTRUCTION MINIMUM STANDARDS				
	Arterial	**Collector**	**Local**	**Freeway**
ADT	>2500	750-2500	<750	>5,000
Right of Way Width	80 ft.	60 ft.	50 ft.	120 ft.
Cul-de-sac R.O.W. Radius	N/A		47 ft.	N/A
Paving	Yes			
Curb and Gutter	See note #1			MODOT
Design Speed	40 mph	30 mph	30 mph	70 mph
Minimum Pavement Radius at Intersecting Streets	30’		20’	MODOT
Minimum Curve Radius	400 ft.	100 ft.	100 ft.	MODOT
Maximum Grade	4%	7%	10%	MODOT
Minimum Grade	0.4 %			MODOT
Stopping Sight Distance	275-325 ft.	200 ft.		MODOT
K Value - Sag Curves	60-70	40		MODOT
Clear Zone	10 ft.			MODOT
Driveway Locations	See Appendix B-1, Drawings 410.01A & 410.01B			MODOT
Bridge Design Loading	HS20-44/3S2			MODOT
Street Cross-Sections	See Appendix B-1, Drawings 110.01-110.11			MODOT

NOTES:

1. **Concrete curb and gutter and pavement** required for new streets and new subdivisions except by variance approved by the Board of Aldermen.

2. **All Corner Lots** – Driveway approaches and sidewalks shall be placed according to these regulations before street will be accepted for maintenance.

3. **All utilities** to be located within Right of Way must be installed before street will be accepted for maintenance.

4. **All signs**, both ID and Regulatory must be installed before street will be accepted for maintenance.

5. **All cul-de-sacs** shall be less than 800 feet from the nearest street that has 2 outlets within the street system. Distance is measured from the centerline of the adjacent street to the center of the cul-de-sac.

6. **In cases** where the Subdivision Regulations and the Street Regulations conflict, the most stringent Standard shall apply

Appendix A-1

Construction and Materials Specifications

Section 100 – Control of Materials	30
Section 200 – Clearing and Grubbing	31
Section 201 – Excavation and Embankment	32
Section 203 – Cut Compaction	41
Section 205 – Sub-grade	42
Section 209 – Final Trimming and Clean Up	43
Section 210 – Aggregate Base Material	44
Section 212 – Aggregate Base	45
Section 213 – Rock Blanket (Rip Rap)	48
Section 220 – Bituminous Materials	49
Section 221 – Aggregate for Asphaltic Concrete	57
Section 222 – Asphaltic Concrete Pavement	59
Section 223 – Preparation of Base and Application of Primer	65
Section 225 – Plant Mix Bituminous Base Course	68
Section 230 – Portland Cement Concrete	75
Section 231 – Portland Cement Concrete Pavement	79
Section 232 – Concrete Curb and Gutter	86
Section 234 – Concrete Sidewalks	87
Section 236 – Patching Portland Cement Concrete Pavement	89
Section 237 – Concrete Driveway Pavement	90
Section 238 – Reinforcement for Portland Cement Concrete	91
Section 250 – Concrete Structures	94
Section 260 – Storm Sewers	105
Section 270 – Fertilizing	112
Section 272 – Mulching	114
Section 275 – Seeding	117
Section 276 – Erosion and Sediment Control	118

Section 277 – Temporary Berms 120
Section 278 – Temporary Slope Drains 122
Section 279 – Temporary Ditch Checks 123
Section 280 – Sediment Basins 125
Section 281 – Temporary Seeding & Mulching 126
Section 282 – Straw Bales 128
Section 283 – Temporary Silt Fence 129
Section 284 – Temporary Pipe 131
Section 285 – Geotextile Fabric 132
Section 286 – Geotextile Construction 134
Section 287 – Erosion Control Blanket 136
Section 288 – Street Signs and Posts 136 A & B

SECTION 100 CONTROL OF MATERIALS

100.1 **Sources of Supply -** Materials shall be obtained from sources of supply, which meet the approval of the City Engineer. Inspection of materials made at principal sources of supply is solely a matter of convenience to the Contractor and producer. All materials shall meet the requirements of the specifications before being incorporated into the work. Any defective materials discovered in the process of handling or at any time during the progress of the work, even though previously accepted, will be rejected. If it is found that a source of supply does not furnish a uniform product or if for any reason the product from any source at any time proves to be unsatisfactory, the Contractor will be required to furnish approved material from other sources. The Contractor shall have no claim for any increased cost on account of such requirement.

100.2 **Specifications,** Certifications**, Samples, and Tests -** When a specification of a national standard (ASTM, AASHTO, etc.) is designated, the material may meet either the designated specifications or the latest revision thereof in effect at the time of the award of the Contract. Tests of samples of materials will be made by the City Engineer in accordance with the latest methods prescribed by the ASTM or the AASHTO. All tests not covered by the above shall be performed as specified by the Engineer. **Certifications on all materials / products must be approved before construction will be accepted for compliance or maintenance.**

100.3 **Storage of Materials -** Materials shall be so stored as to insure preservation of their quality and fitness for the work. The Engineer may direct that they be placed on wooden platforms or other hard, clean surfaces, and not on the ground and he may direct that they be placed under cover when weather conditions endanger the quality of the materials. Materials in storage shall be so arranged as to facilitate inspection. Lawns, grass plots, or private property shall not be used for storage purposes without written permission of the Owner or lessee.

All aggregates and surfacing materials having a maximum size greater than one-half (1/2) inch shall be dumped in horizontal layers when placed in storage. Each layer shall not be more than three (3) feet in depth and the aggregates and surfacing materials shall be deposited in such a manner as to prevent segregation of the sizes.

100.4 **Defective Materials -** All materials not conforming to the requirements of the specifications shall be considered as defective, and all such materials, whether in place or not, shall be rejected and shall be removed immediately from the construction site unless otherwise permitted by the Engineer. No material which has been rejected, and or the defects of which have been subsequently corrected or removed, shall be used until written approval has been given by the Engineer.

SECTION 200 CLEARING AND GRUBBING

200.1 **Description** - Clearing and grubbing shall consist of removing, cutting and disposing of all brush, vegetation, logs, stumps, rubbish and other materials occurring within the limits of the improvement which will interfere with the excavation or which are unsuitable to be left in the roadway foundation. This shall also include the cutting, removing and disposing of all trees and stumps except those that will not interfere with the construction and not shown on the plans. The Contractor shall exercise due care in his construction operations to prevent marring or scarring of trees that are to remain. Stumps and roots in excavated or fill areas where depth of excavation or fill does not exceed three (3) feet shall be removed to a depth of eighteen (18) inches below sub-grade. In fill areas where more than three (3) feet of embankment is required, trees and stumps shall be cut off at the surface of the ground.

SECTION 201 EXCAVATION AND EMBANKMENT

201.1 **Description -** Excavation shall consist of removing all materials necessary for the proper construction of the work and disposing of this material in a satisfactory manner as approved or directed by the Engineer. Embankment shall be formed of suitable material taken from roadway and drainage excavation, borrow excavation and excavation for structures, and placed in successive horizontal layers distributed uniformly over the full width of the cross section. Embankment shall be made of sufficient height and width so that at the time of acceptance by the City, they will conform to the typical section shown on the plans.

201.2 **Classification of Excavated Materials -** In these specifications, excavating is divided into two classifications, earth and rock, which shall cover all materials encountered. The determination and classification of such excavated materials will be based on the following definitions:

201.2.1 Earth excavation will include all materials not otherwise classified. Decomposed or disintegrated shale which, in the opinion of the Engineer can be effectively plowed, spaded, or removed with power driven excavating equipment, as well as blacktop pavement and gravel base, will be classified as earth.

201.2.2 Rock excavation is defined as being sandstone, limestone, flint, granite, quartzite, or similar material, in masses measuring more than one (1) cubic yard in volume or in ledges four (4) inches or more in thickness, and which requires blasting or jack hammering for its practical and effective removal. Should rock be encountered in two (2) or more ledges, each ledge being not less than three (3) inches thick and with inter-lying strata or earth not over twelve (12) inches thick in each stratum, the entire volume from the top of the top ledge to the bottom of the bottom ledge of rock will be classified as rock.

201.3 **General -** After all stripping has been done, excavation of every description and of whatever substances encountered within the clearing limits of the project shall be performed to the lines and grades indicated on the drawings. All suitable excavated material shall be transported to and placed in filled areas within the limits of the work as specified and shown on the drawings. All excavated materials which are considered unsuitable by the Engineer and any surplus of excavated material which is not required for fill will be known as "waste" and shall be disposed of by the Contractor. Any additional fill material required which is not available from excavation within the project area shall be supplied by the Contractor. All such material rough to the site by the Contractor shall be subject to the approval of the Engineer. During construction, excavation and fill shall be performed in a manner and sequence that will provide drainage at all times.

201.4 **Excavation for Structures -** All structures shall be founded on undisturbed subsoil. Unauthorized excavation below the specified structure sub-grade shall be replaced with concrete.

Excavation shall be made in open cut to alignment and depth as shown on the profiles and drawings, except as otherwise indicated in the specifications drawings.

Excavation for manholes, curb inlets, junction boxes and similar structures shall be sufficient to leave at least twelve (12) inches in the clear between their outer surfaces and the embankment or timber which may be used to hold and protect the excavation. In all cases the clearance between the outer face of structures and the surrounding excavation shall be sufficient to allow the proper performance of the work including the plastering of exterior wall surfaces where required by the specifications or plans.

The Contractor shall not open more trench in advance of construction than necessary to expedite the work. Three hundred (300) feet will be the maximum length of open trench allowed.

Wherever necessary to prevent caving the excavation shall be adequately sheeted, braced and drained so that workmen may work therein safely and efficiently. Where trench bottom is in rock, the excavation limits shall allow solid rock to be exposed and cleaned of all loose material and cut to a firm surface before any foundation concrete is placed.

Whenever wet or otherwise unstable soil that is incapable of properly supporting the structures, as determined by the Engineer, is encountered such soil shall be removed to the depth required and the excavation backfilled to the proper grade with coarse sand, fine gravel, or other suitable material as may be authorized. All excavations for structures shall be kept dry and no pipe or reinforcing steel shall be installed in water and no water shall be permitted to inundate the reinforcing steel before concrete has been placed. All excavations shall be kept dewatered to the extent that water will not come in contact with any concrete within twelve (12) hours after placing. When excavations are carried below ground water elevations such excavations shall be dewatered by lowering and maintaining the ground water level at least twelve (12) inches below such excavations during all construction, including sub-grade excavation, placing of reinforcing steel or pipe, placing of concrete, plastering of masonry, and shall be maintained in a dry condition until all concrete has been placed and allowed to harden for at least twelve (12) hours as specified above.

201.5 **Excavation for Streets** - Grading shall conform to the typical sections shown on the drawings and shall be finished within a tolerance of one-half (1/2) inch of the grades indicated. Any soft and unsatisfactory material within the limits of the pavement areas shall be removed and disposed of as directed by the Engineer. Fill material required in excess of that produced by normal grading operations shall be excavated from areas indicated on the drawing or as directed by the Engineer. Excavated material not acceptable for use as fill shall be disposed of by the Contractor.

201.6 **Excavation for Storm Sewers**

201.6.1 **General -** The Contractor shall perform all excavation of every description and of whatever substances encountered to the depths indicated on the drawings or as otherwise specified. During excavation, material suitable for backfilling shall be piled in an orderly manner a sufficient distance from the banks of the trench to avoid overloading and to prevent slides or cave-ins. All excavated materials not required or suitable for backfill shall be removed and disposed of off the site. Such grading shall be done as may be necessary to prevent surface water from flowing into trenches or other excavations, and to maintain the flow of water in natural water courses on or adjacent to the site. Any water accumulating in trenches or other excavations, shall be removed by pumping or by other approved methods as specified elsewhere. Unless otherwise indicated or authorized, excavation shall be by open cut. The use of excavation machinery will be permitted except in places where operation of same will cause damage to trees, buildings, or existing structures above or below ground, in which case hand methods shall be employed.

201.6.2 **Trench Bracing and Sheeting** - All trenches, where necessary to prevent caving or sliding and to provide adequate protection to workmen and to the sewer or pipe line during and after construction, shall be suitably and substantially braced and sheeted. Such sheeting and bracing shall be carefully placed so as to provide complete protection to men and materials in the trench. Trench bracing shall be left in the trench permanently where such permanent bracing is required for the protection of the sewer or pipe line from excessive superimposed loads caused by the caving or sliding of trench banks either before or after backfilling.

201.6.3 **Dewatering of Trenches** - During excavation, pipe laying and jointing, or other work necessary for the installation of the storm sewers, trenches shall be kept free from water and in a workable condition. Where the trench bottom is found to be unstable or unsatisfactory because of water, and in all cases where the trench bottom falls below the ground water level by means of well points, pumps or by other means acceptable to the Engineer a sufficient amount to keep the trench free from water and the trench bottom stable at any time that work within the trench is in progress. As specified herein before the

Contractor shall take all necessary measures to prevent surface water from entering the trench and he shall further take all necessary measures to prevent the inundation or damage to any private property or structures adjacent to the site of the work.

201.6.4 **Trench Alignment and Grade -** The alignment, depth, and grade of all storm sewer trenches shall be maintained as shown on the drawing, and where necessary in the opinion of the Engineer shall be determined by overhead grade lines parallel to the pipe invert.

201.6.5 **Trench Width -** Width shall be no wider than is necessary for the proper jointing of the pipe and in no case shall exceed the outside diameter of the pipe plus eight (8) inches on either side, unless specifically authorized by the Engineer.

201.6.6 **Unauthorized Trench Widths -** Where trench widths as specified above, are exceeded for any reason other than by order of the Engineer, either special pipe embedment, concrete cradle, or concrete encasement, or other suitable methods shall be required as demanded by loading conditions and as ordered by the Engineer. Any additional work required, as stipulated above, as a result of unauthorized over excavation shall be performed by and at the expense of the Contractor.

201.6.7 **Preparation of Pipe Sub-grade -** Pipe sub-grade shall be prepared after rough trenching is complete and shall be done with hand tools immediately prior to installing pipe. The bottom of the trench shall be prepared so as to provide uniform support of the bottom quadrant of the pipe and bell holes or depression shall be hand excavated where bell and spigot pipe is used. The trench bottom shall be evenly graded as indicated on the plans and areas which are too high shall be shaved as required. Any portions of the trench bottom which are found to be too low shall be filled with suitable material, thoroughly rammed and tamped and brought to true grade.

201.6.8 **Replacement of Unsuitable Pipe Foundation Material -** Where, in the opinion of the Engineer, the trench bottom is found to be of a wet or otherwise unstable material or where it is impossible to provide proper bearing for the pipe, or where it is found to be impossible to carry on construction operation due to the condition of the trench bottom, the Contractor shall remove all unstable or unsuitable material to a depth of not less than four (4) inches below the elevation of the pipe sub-grade over the entire width of the trench and shall replace and backfill with a suitable finely divided material of acceptable quality and sufficiently damp for proper compaction. Such material shall be thoroughly compacted by tamping or rolling over the entire width of the trench and shall be brought to proper grade and shape and the proper elevation for the installation of the pipe as shown on the plans.

201.7 **Blasting -** Blasting for excavation shall only be performed after securing approval of the Director, proper notification of the Boone County Fire District and when proper precautions are taken for the protection of persons or property. The hours of blasting will be fixed by the Engineer. Any damage caused by blasting shall be repaired by the Contractor at his expense. The Contractor's method of procedure relative to blasting shall conform to state laws and municipal ordinances. No blasting shall be attempted within a distance of eighty (80) feet from finished work.

All excavated rock or shale which cannot be handled and compacted as earth shall be kept separate from earth and shall not be mixed with other backfill except as specified and directed.

201.8 **Excavation through Pavement -** Pavement, pavement base course, concrete walks, and concrete curbing shall be cut and removed only where shown on the plans, where specified or where directed and authorized by the Engineer. Cuts shall be no larger than necessary to provide adequate working space for installation of the pipe appurtenance or structure, except where other miscellaneous removals are required on the drawings

All cuts in pavement, walks or curbing shall be neatly sawn and shall be straight and parallel to existing construction joints. Any pavement, curbing, gutter or sidewalks, the removal of which was not required in conjunction with construction under this Contract, which is damaged due to construction operations by the Contractor shall be removed and replaced by the Contractor in first class manner, as hereinafter specified.

201.9 **Protection of Existing Utilities -** Due care must be taken not to disturb inlet covers, manhole frames, valve boxes, fire plugs, house connections or private water.

201.10 **Pavement Replacement -** All pavement, curbing, gutter, or sidewalks removed during construction of the project for any reason shall be replaced unless otherwise shown on the drawings or directed by the Engineer, the replacement construction conforming in type, quality, and dimensions to that of the portion so removed.

201.11 **Embankment**

201.11.1 **Preparation of Ground Surface for Fill -** All vegetation, such as roots, brush, heavy sod, heavy growth or grass, and all decayed vegetable matter, rubbish, and other unsuitable material within the area upon which fill is to be placed shall be stripped or otherwise removed before the fill is started. In no case will such objectionable material be allowed to remain in or under the fill area. Sloped ground surfaces steeper than one (1) vertical to four (4) horizontal on which fill is to be placed, shall be plowed, stepped (benched), or broken up in such manner that the fill material will bond with the existing surface.

201.11.2 **General** - Where filling is required to raise the sub-grade under areas to be paved or surfaced, all fill materials shall consist of earth or other approved material. All organic or other undesirable material shall be removed. All fill under paved surfaces such as streets and parking lots shall be compacted by a power roller or other approved equipment and the sub-grade brought to a reasonably true and even plain. Earth used for fill shall be placed in layers not more than eight (8) inches thick, each layer shall be uniformly spread, moistened as required, and then compacted to ninety percent (90%) of maximum density, obtained at the optimum moisture content, as determined by AASHTO Method T-99-38.

201.12 **Backfill**

201.12.1 **Street Backfill** - After completion of street, curb and gutter, and other construction below the elevation of final grades, all forms shall be removed and the excavation shall be cleaned of trash and debris. Backfill shall be free of all objectionable material and shall be placed in horizontal layers not more than nine (9) inches thick, and shall have a proper moisture content for the required degree of compaction. All parking areas, driveways, streets, and other paved areas shall be backfilled with approved material and compacted to ninety percent (90%) of maximum density obtained at the optimum moisture content.

Backfilling and grading behind curbs shall be performed to the lines and grades indicated on the drawings. The backfilled area shall provide a smooth, even transition from the existing lawn grades to the curb and shall be done so as to assure desired drainage.

When indicated on the plans and included as a bid item, the top four (4) inches of backfill behind curbs shall be topsoil, free from rocks, gravel, and any undesirable material. This material may be either topsoil available within the limits of the project or it may be topsoil furnished by the Contractor.

All driveways, paved or unpaved, which are disturbed by grading or excavation of any kind shall be graded and shaped to provide a reasonable approach, and shall upon completion of the job be left in passable condition. All driveway approaches shall be paved to the right-of-way line.

201.12.2 **Trench Backfill**

201.12.2.1 **Materials** - All materials which are to be compacted by tamping or rolling, including all tamped embedment, shall be free from sticks, large roots, or other organic matter coarser than grass roots, stones, hard lumps, and clods, and shall have a moisture content such that optimum compaction is obtained when properly tamped or rolled.

Granular material for replacement of unsuitable foundation material removed from trench bottoms shall consist of coarse sand, lime gravel, and shall be free from dust, clay, and other materials which would cause the materials to crack or cake. When tested with square mesh laboratory sieves, not less than ninety-five percent (95%) shall pass a three-eighths (3/8) inch sieve and not more than five percent (5%) shall pass a No. 10 sieve.

Fine sand which will pass a No. 4 mesh sieve shall be used for inundation purposes unless otherwise specified or authorized by the Engineer. Sand approved for use in concrete and mortar will be acceptable, although concrete quality is not required. Unwashed pit, bank, or bar sand, will be acceptable provided that the clay content does not exceed five percent (5%). A fineness modulus of less than 2.50 is preferred.

201.12.2.2 **Compaction** - All backfill under paved surfaces, streets, driveways, sidewalks, or parking areas, shall be thoroughly compacted by pneumatic tampers, or other approved methods, to the original state of consolidation of the soil encountered. Backfill shall be placed in uncompacted lifts not to exceed six (6) inches and each lift shall be thoroughly and adequately compacted. Care shall be exercised not to disturb the pipe when placing backfill. The compacted earth backfill shall be brought to an elevation of approximately six (6) inches below the finished surface grade and then surface grade or paving constructed. When authorized by the Engineer inundated sand backfill may be used in lieu of compacted earth backfill under paved surfaces.

Trenches in grassed or sodded areas shall be backfilled in lifts not to exceed twelve (12) inches and shall be compacted by suitable means to prevent undue settlement. Where authorized by the Engineer backfill may be settled by inundation. This method shall not be used where any damage to property would result from the use of water. After backfill and compaction is complete trenches shall be leveled off and grading shall be performed as is necessary to restore yards or other grassed or sodded areas to their original condition.

201.12.2.3. **Inundated Sand Backfill** - In all cases where so required by the plans or specifications the Contractor shall install inundated sand backfill. Inundated sand fill may also be used, at the option of the Contractor, in lieu of required tamping or other mechanical compaction above the

specified pipe embedment, in any location where the use of water, in the opinion of the Engineer, would cause no damage. It shall be the Contractor's responsibility to provide an adequate supply of water to insure the complete inundation of the sand to the top of the trench or structure sub-grade in one operation. Water shall be introduced into the lower one-third (1/3) of the trench and allowed to rise to the surface until inundation is completed. Trench backfill on each side of sand fill installations shall be installed and maintained at an elevation above the top of the highest point of the sand-filled area in order to adequately confine the water within the section being inundated; temporary dikes, fills, or embankments constructed from excess backfill material, shall be placed across drainage ditches and on sides of slopes where and as necessary. All such temporary dikes, fills, and embankments, shall be removed as soon as the water has drained from the sand to an elevation below the bottom of such ditches or slopes.

201.12.2.4 **Water Settlement of Earth Backfill** - Earth backfill may be compacted by the water settlement or inundation method where permitted by the specification or authorized by the Owner, and approved by the Engineer, and where water service and fire hydrants are available. Water shall be applied in a manner which will provide effective settlement of the backfill with the use of a minimum amount of water; in no case shall trenches be permitted to overflow or water be otherwise wasted. When settling earth containing considerable clays, water shall be introduced into the bottom of the trench as quickly as possible by forcing the hose vertically downward in the trench and by regulating the rate of initial application until settlement opens up a channel for the water to flow beneath the backfill so that it will cave or fall into the water from above.

201.12.3 **Structure Backfill** - Backfilling of all structures shall be permitted only after an adequate curing time, as determined by the Engineer, has lapsed.

All excavations shall be backfilled to the lines and grades shown on the drawings. In no instance shall backfill be dumped, bull-dozed, or otherwise deposited in bulk upon the newly-constructed structure. After the required curing time, the excavation shall be backfilled by depositing, entirely without shock and with careful pneumatic tamping, suitable earth, sand, or other acceptable material in lifts not to exceed six (6) inches in compacted thickness. Backfill shall be deposited at approximately the same elevation on opposite sides of the structure and shall be compacted in place to a density equal to or greater than ninety percent (90%) of maximum density as determined by the Standard AASHTO Method T-99-38. Inundated sand backfill shall not be used.

No trench backfill material containing rock, or debris from rock excavation, shall be placed in the upper eighteen (18) inches of the

excavation except with the specific permission of the Engineer. Large stones may be placed in the remainder of the trench backfill only if well separated and so arranged that no interference with backfill compaction will result.

Any deficiency in the quantity of material for backfilling the excavation, or for filling depressions caused by settlement, shall be supplied by the Contractor. All excavated material in excess of that necessary to fill the trench to the grade shown on the drawings shall be removed and disposed of by the Contractor.

201.12.4 **Responsibility of Contractor for Backfill Settlement -** The Contractor shall be responsible for the satisfactory compaction and maintenance thereof, of all trenches and structural excavation of any description required. If prior to the final acceptance of this project, any trenches or other excavations are found to have settled, the Contractor shall immediately rework them and restore them to the specified grades. Any sod, paving, or other surfacing damaged by settlement of trenches prior to acceptance of the work shall be replaced by and at the expense of the Contractor.

SECTION 203 CUT COMPACTION

203.1 **Description -** Cut compaction shall be performed after removal of the street excavation material to the required cross-section. A surface parallel to the pavement slope, 12 inches below the bottom of the pavement or lowest base course, shall be temporarily exposed for the full width between roadway inslopes. The exposed material, to a depth of 6 inches, shall be manipulated and compacted not less than the required density. The material above this compacted plane shall be spread in layers not exceeding 8 inches loose thickness, each layer being wetted or dried as necessary and compacted to the specified density.

203.1.1 Cut compaction shall be performed to an additional depth of 12 inches for 50 feet on each side of the intersection of the natural ground and the top of the sub-grade, then graded uniformly for 30 feet to meet the depth requirements of **Section 203.1**, and, if necessary, **Section 203.3.1.2**.

203.1.2 The existing ground for the full width between roadway slopes under embankments of less than 18 inches high shall be treated in accordance with **Section 203.1** to only such depth as to ensure having 18 inches of material of the required density and moisture below the top of the finished grade.

SECTION 205 SUB-GRADE

205.1 **Description** - That portion of the graded roadbed upon which surfacing is to be placed is hereby designated as the sub-grade. The sub-grade shall be constructed so that it will be uniform in density throughout its entire width and will conform to the line, grade, and cross section shown on the plans or as established by the Engineer.

205.2 **Finishing** - After excavation and embankment has been completed the sub-grade shall be brought to true shape and rolled with a self-propelled roller weighing not more than five (5) tons for portland cement concrete base course or pavement. For all other types of pavement, a three-wheeled roller weighing not less than seven (7) tons shall be used for rolling sub-grade. It shall then be tested with an approved template furnished by the Contractor. If the sub-grade is not to the proper elevation, material shall be added or removed as required and if material is added it shall be compacted in a manner satisfactory to the Engineer. This process shall be repeated until all irregularities are removed. Extreme care shall be taken in shaping the sub-grade, so that at no place will the completed pavement vary from the specified thickness. All soft and yielding spots shall be removed to a depth of not-to-exceed two (2) feet, and all vegetable substances or unsuitable material shall be removed, and the resulting spaces shall be refilled with approved material. All large rocks or boulders encountered shall be removed or broken off to a depth of not less than six (6) inches below the finished surface of the sub-grade, and the space shall be refilled. The sub-grade shall again be rolled until no depressions occur.

205.3 **Inspection** – To check compaction of sub-grade before sub-base or base is applied, a fully loaded tandem axle dump truck shall be driven over the sub-grade. If the sub-grade deflects, the sub-grade shall not pass the inspection.

205.4 **Restoring Sub-grade to Acceptable Condition** - If the sub-grade is disturbed in any manner after the work, described in the preceding paragraph, has been completed, it shall be brought to an acceptable condition by reshaping and rolling, or with macadam. If required by the Engineer, the Contractor shall provide planking to protect the sub-grade from disturbance.

205.5 **Amount of Finished Sub-grade** - There shall be at all times at least fifty (50) feet of sub-grade in the condition described in the preceding **Sections 205.2** and **205.3**, ahead of the point at which concrete is being placed.

SECTION 209 FINAL TRIMMING AND CLEAN UP

209.1 **Requirements -** Prior to the acceptance of the work, all shoulders, slopes, ditches if any, and sidewalk spaces shall be shaped, trimmed and made uniform, smooth and true to line, grade and cross section. All debris and rubbish resulting from the construction work or occurring with the limits of the improvement shall be disposed of before final acceptance will be made.

SECTION 210 AGGREGATE BASE MATERIAL

210.1 **Type 1 Aggregate (Rolled Stone)** - Aggregate for Type 1 base shall be essentially limestone. The crushed stone shall not contain deleterious material such as shale or disintegrated stone in excess of fifteen percent (15%). Any silt, any clay, and any deleterious material shall be uniformly distributed throughout the mass. The aggregates shall conform to the following gradation requirement:

Passing 1 inch sieve	100%
Passing 1/2 inch sieve	60-90%
Passing No. 4 sieve	40-60%
Passing No. 40 sieve	15-35%

210.2 **Type 2 Aggregate** - Aggregate for Type 2 base shall consist of crushed stone, limestone screening, sand and gravel, sand, chat, or sandstone, or combinations of these materials, with or without soil binder as may be required. The material shall conform to the following gradation requirements and in addition shall be so graded that it will readily compact to the specified density and withstand construction traffic without distortion and displacement.

If flint chat or tiff chat is used, it shall meet the requirements of this section and in addition shall have at least twenty percent (20%) passing the No. 40 sieve.

Soil binder shall consist of soil or similar fine material with such cohesive properties as to impart the desired plasticity to the finished product.

Compacted Granular Base

Passing 1 1/2 inch sieve	100%
Passing No. 40 sieve	15-50%
Passing No. 200 sieve, not more than	35%

2 ½" Minus Compacted Granular Base

Passing 3 inch sieve	100%
Passing 2 ½ inch sieve	90-100%
Passing 2 inch sieve	80-100%
Passing 1 inch sieve	75-90%
Passing ½ inch sieve	45-60%

SECTION 212 AGGREGATE BASE

212.1 **Description** - Aggregate base shall consist of a uniform mixture of properly graded materials placed on a prepared sub-grade as shown on the plans. The type of aggregate used shall be as specified on the plans.

212.2 **Materials**

212.2.1 Aggregate base materials shall conform to the following:

Type 1 Aggregate (Rolled Stone)	**Section 210.1**
Type 2 Aggregate (Compacted Granular Base) & (2 1/2" Compacted Granular Base)	**Section 210.2**

212.2.2 Water shall be clean and free from acid, salt, oil and other organic matter. The use of City water is preferred.

212.3 **Equipment**

212.3.1 **Mixing Equipment** - Equipment for producing mixture shall be an approved stabilization pugmill, which will uniformly mix the water with the aggregate in such manner as to avoid undue segregation.

212.3.2 **Construction Equipment** - Equipment for this work shall consist of blade or motor patrol graders, self-powered steel wheeled rollers, self-propelled pneumatic-tired rollers, vibratory compactors, sprinklers, or any other suitable equipment required to properly complete the work.

The Contractor shall furnish all equipment, tools, machinery and other appliances, which in the opinion of the Engineer, are necessary for handling materials and performing any part of the work.

All equipment shall be subject to the approval of the Engineer before the work is started, and wherever found unsatisfactory, shall be changed and/or improved as required by the Engineer. All equipment, tools and machinery must be maintained in satisfactory working condition.

212.4 **Preparation of Mixture** - Base material, any additional material required, and water in an amount sufficient to insure the desired compaction shall be thoroughly mixed and delivered to the construction site as a combined product. Excess moisture resulting in run-off shall be avoided. The final product of base material mixed with binder shall meet the specified gradation and plasticity index (P.I.). If necessary for satisfactory work, the mixture or sub-grade or both shall be allowed to dry to a moisture content which will permit proper compacting.

212.5 **Construction Procedure**

212.5.1 **Sub-grade -** All work on any section of the sub-grade on which the base is to be constructed shall be completed prior to the placing of any base material on that section. Immediately before spreading the mixture, the sub-grade shall be sprinkled as specified by the Engineer.

212.5.2 **Spreading, Shaping and Compacting -** In no case will the Contractor be permitted to place the mixture or manipulate it on muddy or frozen sub-grade. Also, any mixture containing frost or frozen particles shall not be placed on the sub-grade or compacted. After the sub-grade has been properly prepared, the mixture shall be uniformly spread by blades, or other approved equipment, in successive layers of courses to such depth that, when compacted, the base will have the minimum thickness shown on the typical cross section. The Contractor may construct the base in any number of layers which he may find convenient to facilitate compacting, except that, in no case, shall any individual layer have a compacted thickness of more than four (4) inches, provided however when vibrating equipment is used, the base may be constructed in one (1) course (not exceeding six (6) inches), provided the equipment used proves capable of compacting the base in accordance with these specifications. Each layer shall be compacted as hereinafter specified before any succeeding layer is placed. Except as otherwise permitted by the Engineer, the first course placed upon the sub-grade shall be compacted and allowed to become firm before any subsequent is constructed.

If, in the opinion of the Engineer, the mixture becomes too dry to permit compaction, water shall be added during the compacting operations in such an amount as to insure proper compaction. If, for any reason, the mixture is too wet for proper compaction it shall be allowed to dry until the proper moisture content is obtained.

The mixture shall be handled in such manner as to avoid undue segregation. If segregation occurs, or, if the mixture becomes contaminated, such segregated or contaminated materials shall be removed and replaced with materials of suitable quality and gradation, except that areas of surface segregation may be corrected by spreading a quantity of limestone screening sufficient to close the voids and bind the loose material firmly in place. The screenings shall be wet and rolled so as to create a dense and uniform surface. Segregated or contaminated materials, which the Engineer orders removed, shall be removed and replaced with suitable material at the sole expense of the Contractor. The Engineer may restrict hauling over the completed or partially completed work after inclement weather, or at any time when the sub-grade is soft and there is tendency for the sub-grade material to work into the surface material. Any screenings used in correcting areas of surface segregation will be measured and paid for as part of the aggregate constituting the base course. All extra work or expense involved due to screenings being required shall be

the Contractor's obligation without extra cost to the City. Compaction shall be performed by the use of any approved equipment within the limits of these specifications, which will produce satisfactory results.

Shaping and compaction shall be carried on until a true, even, uniform base course of the proper grade, cross-section and density is obtained. Proper moisture content shall be maintained by wetting the surface as required during shaping and compacting operations. The use of excess water, resulting in run-off or in the formation of a slurry on the surface shall be avoided.

Final rolling on the top course of multiple-course construction or on single-course construction shall be accomplished by a self-propelled smooth-wheeled roller weighing not less than seven (7) tons, nor more than ten (10) tons.

Type 1 aggregate used for shoulders adjacent to portland cement concrete pavement, and Type 2 aggregate shall be compacted to not less than ninety-five percent (95%) of standard maximum density. Type 1 aggregate for use on other than shoulders adjacent to portland cement concrete pavement shall not be compacted to less than standard maximum density. Type1 aggregate for use on other than shoulders adjacent to portland concrete pavement shall not be compacted to less than standard maximum density.

212.5.3 **Maintenance** - When the base is to be constructed in more than one (1) layer, the Contractor shall maintain the underlying layers by wetting or drying, blading and rolling in a manner satisfactory to the Engineer until the next layer is completed. This maintenance shall be entirely at the Contractor's expense. If a prime coat is specified in the Contract, the Contractor will be required to apply the prime coat on any completed portion of the base as soon as practicable, but he will not be permitted to prime or to construct a bituminous surface course when the moisture content of the top two (2) inches of the base is more than two-thirds (2/3) of the optimum moisture.

If the Contract includes the construction of portland cement concrete pavement, the Contractor will be required to maintain the completed base until the pavement is placed. The base shall be considered complete when it has the required density with a uniform surface of the proper grade and final template section. Lateral ditches shall be constructed through shoulders where possible to insure adequate surface drainage.

212.5.4 **Inspection** – To check compaction of sub-grade before sub-base or base is applied, a fully loaded tandem axle dump truck shall be driven over the sub-grade. If the sub-grade deflects, the sub-grade shall not pass the inspection.

SECTION 213 ROCK BLANKET (RIP RAP)

213.1 **Description -** This work shall consist of constructing a protecting blanket of rock or broken concrete on slopes or stream banks.

213.2 **Material -** The material for rock blanket shall be durable stone or broken concrete containing a combined total of not more than 10 percent of earth, sand, shale and non-durable rock. It is preferable that the material contain a large percentage of pieces as large as the thickness of the blanket will permit, with enough smaller pieces of various sizes to fill the larger voids.

Type 1 Rock Blanket – At least 40 percent of the mass shall be of pieces having a volume of one cubic foot or more.

Type 2 Rock Blanket – At least 60 percent of the mass shall be of pieces having a volume of one cubic foot or more.

Acceptance of quality and size of material will be made once supply tickets for such rock is received by the department.

SECTION 220 BITUMINOUS MATERIALS

Note: Streets shall be concrete except by variance of the Board of Aldermen.

220.1 **General - Approval of the Source of Bituminous Material** - For all bituminous construction the Contractor shall obtain from the Engineer written approval of the sources of bituminous materials. Such approval shall be obtained before any shipments are started. The Contractor shall submit written evidence to the Engineer that all bituminous materials used conform to the requirements of **Section 220.1** through **Section 220.14**.

220.2 **Measurement of Liquid Bituminous Material** - The Contractor shall submit to the Engineer, invoices in triplicate on all shipments of bituminous materials. The following volume correction methods, where applicable, shall be used for determining the volume of bituminous materials mentioned in these specifications.

220.3 **Petroleum Products** - This item includes road oil, liquid asphaltic material cutback, and penetration asphalt. Measurement of the material shall be base on the volume of sixty degrees Fahrenheit (60°F.) using the volume correction factors of ASTM D 1250-56, Table 25, for converting the material from the volume at the observed temperature to the volume at sixty degrees Fahrenheit (60°F.). The volume of uncalibrated distributors and tank trucks may be determined by weighing before and after unloading to determine the net weight of the material. The net weight shall be converted to gallons by using the unit weight in pounds per gallon at sixty degrees Fahrenheit (60°F.) designated by the Engineer.

220.4 **Emulsified Asphalt** - Measurement of the material shall be based on the volume at sixty degrees Fahrenheit (60°F.) using a coefficient of expansion of .0003 per degree Fahrenheit for converting the material from the volume at the observed temperature to the volume at sixty degrees Fahrenheit (60°F.).

220.5 **Liquid Tar Products** – Measurement of the material shall be based on the volume at sixty degrees Fahrenheit (60° F.) using the correction tables of ASTM D 633-44 for converting the material from the volume at the observed temperature to the volume at sixty degrees Fahrenheit (60° F.). In case the observed temperature exceeds the maximum given in the tables, the measurement shall then be made by considering unit volume at the observed temperature and calculating the volume at sixty degrees Fahrenheit (60° F.), by using a coefficient of expansion of .00033 per degree Fahrenheit.

220.6 **Proportioning and Blending Bituminous Material Constituents** – All materials shall be properly proportioned and thoroughly blended in suitable tanks prior to delivery to transportation equipment, or may be proportioned and blended by use of automatic proportioning equipment. Blending in tanks in quantities of less than eight thousand (8,000) gallons, or in tank trucks will not be permitted. All automatic proportioning blenders shall meet the approval of the Engineer and shall be equipped with precision

instruments, including electrically interlocked motors and an automatic recorder that prints the quantity of each component on the shipping ticket.

220.7 Application Temperatures for Bituminous Materials

ASPHALTIC MATERIAL	TEMPERATURE DEGREES FAHRENHEIT			
	SPRAYING		MIXING	
	MIN	MAX	MIN	MAX
X00-300 Penetration Asphalt	260	325	200	275
All other Penetration Asphalt	285	350	275	325
RC-0	65	135	50	120
RC-1	110	180	80	125
RC-2	140	210	80	150
RC-3	170	240	125	175
RC-4	180	255	150	200
RC-5	215	285	175	225
MC-0	70	140	50	120
MC-1	110	185	80	150
MC-2	140	215	100	200
MC-3	175	250	150	200
MC-4	190	265	175	225
MC-5	220	290	200	250
SC-1	110	185	80	200
SC-2	140	215	150	200
SC-3	175	250	175	250
SC-4	190	265	175	250
SC-5	220	290	200	275
EMULSIONS				
RS-1	75	130	---	---
RS-2	110	160	---	---
RS-3	100	160	100	160
SS-1	75	130	75	130
REFINED TARS				
RT-1,2	60	125	---	---
RT-3,4,5,6	80	150	80	150
RT-7,8,9	150	225	150	225
RT-10,11,12	175	250	175	250

220.8 **Type RC Liquid Asphaltic Materials** - The cutback asphalt shall be produced by fluxing an asphaltic base with a suitable light volatile solvent. It shall be homogenous and free from water, and shall conform to the requirements of Table I for the grade specified in the Contract.

220.9 **Type MC Liquid Asphaltic Materials** - The cutback asphalt shall be produced by fluxing an asphaltic base with suitable volatile solvents. It shall be homogenous and free from water, and shall conform to the requirements of Table II for the grade specified in the Contract.

220.10 **Type SC Liquid Asphaltic Materials** - Type SC liquid asphaltic material shall be homogenous and shall not foam when heated …….0…to two hundred and ten degrees Fahrenheit (210°F.). It shall conform to the requirements of Table III for the grade specified in the Contract.

TABLE I--Type RC Liquid Asphaltic Materials

Grade	Extra Light	Light	Medium	Heavy	Extra Heavy	Semi-Solid
Designation	RC-0	RC-1	RC-2	RC-3	RC-4	RC-5
(A) Flash Point F. (Tag Open Cup)			80+	80+	80+	80+
(B) Viscosity Saybolt-Furol,						
at 77°	75-150					
at 122°		75-150				
at 140°			100-200	250-500		
at 180°					125-250	300-600
(C) Distillation--percent by volume of total distillate to 680°F. to						
(1) 374°	15+	10+				
(2) 437°	55+	50+	40+	25+	8+	
(3) 500°	75+	70+	65+	55+	40+	25+
(4) 600°	90+	80+	87+	83+	80+	70+
Residue above 680°F. volume percent by diff	50+	60+	67+	73+	78+	82+
(D) Tests on residue from distillation						
(1) Penetration 77°F., 100g., 5 sec.	80-120	80-120	80-120	80-120	80-120	80-120
(2) Ductility 77°F.	100+	100+	100+	100+	100+	100+
(3) Percent Soluble in CCI	99.5+	99.5+	99.5+	99.5+	99.5+	99.5+
(4) Oliensis Spot Test	Neg.	Neg.	Neg.	Neg.	Neg.	Neg.

TABLE II--Type MC Liquid Asphaltic Materials

Grade	Extra Light	Light	Medium	Heavy	Extra Heavy	Semi-Solid
Designation	MC-0	MC-1	MC-2	MC-3	MC-4	MC-5
(A) Flash Point						
(1) Tag Open Cup F.	100+	100+				
(2) Cleveland Open Cup F.			150+	150+	150+	150+
(B) Viscosity Saybolt-Furol;						
(1) at 77° F.	75-100					
(2) at 122°F.		75-150				
(3) at 140°F.			100-200	250-500		
(4) at 180°F.					125-250	300-600
(C) Distillation—percent by volume total distillate to 680°F.						
(1) to 437°F.	25	20	10	5	0	0
(2) to 500°F.	40-70	25-65	15-55	5-40	30	20
(3) to 600°F.	75-93	70-90	60-87	55-85	40-80	20-75
(4) Residue from distillation to 680°volume percent by diff	50+	60+	67+	73+	78+	82+
(D) Tests of residue from distillation:						
(1) Penetration 77°F. 100 g., 5 sec.	150-300	150-300	150-300	150-300	150-300	150-300
(2) Ductility at 77°F. for residue of less than 200 penetration (cm)	100+	100+	100+	100+	100+	100+
(3) Ductility at 60°F. for residue of 200-300 penetration (cm)	100+	100+	100+	100+	100+	100+
(4) Percent soluble in $CC1_4$	99.5+	99.5	99.5+	99.5	99.5+	99.5+
(5) Oliensis Spot Test	Neg.	Neg.	Neg.	Neg.	Neg.	Neg.

TABLE III--Type SC Liquid Asphaltic Materials

Grade	**Light**	**Medium**	**Heavy**	**Extra Heavy**
Designation	SC-1	SC-2	SC-3	SC-4
Used	Prime	Surface Treatment	Binder	Binder
1. Water, not more	0.5%	0.5%	0.5%	0.5%
2. Specific gravity 60°F, not less than			1.010	1.010
3. Asphaltic Residue of 100 penetration, not less than	50%	60%	70%	78%
4. Ductility of 100 penetration residue, at 77°F., not less than	100 cm.	100 cm.	100 cm.	100 cm.
5. Viscosity (Saybolt-Furol), at 122°	75-125	125-200		
6. Flash point (Cleveland Open Cup) not less than	150°F	200°F	200˚F	200˚F
7. Loss on heating 50 g. 5 hrs. at 325°F., not more than	11%	9%	9%	5%
8. Percent soluble in carbon tetrachloride, not less than	99.0	99.0	99.0	99.0

220.11 **Asphalt Cement (60 to 100 Penetration)** - Asphalt cement shall be homogenous and free from water, and shall not, on heating, foam below the specified minimum flash point. It shall be prepared by the refining of crude petroleum by suitable methods. A solid native lake asphalt fluxed to the proper consistency with a suitable oil asphaltic flux may be permitted. Asphalt cement shall meet the following requirements:

	Oil Bermudez	**Fluxed Trinadad**	**Fluxed Asphalt**
Penetration, 25°C. (77°F.) 100 g, 5 seconds	60-100	60-100	60-100
Flash point (Cleveland Open Cup) (not less than)	230°C	175°C	175°C
Softening Point (Ring and Ball)	40°- 65°C	40°- 55°C	40°- 60°C
Loss on heating 50 g. for 5 hrs at 163°C. (325°F.), not more than	1.0%	3.0%	3.0%
Penetration of residue, 25°C. (77°F.), 100 g., 5 sec.in percent of original penetration, not less than	60	50	50
Total bitumen (soluble in carbon disulfide), not less than	99.5%	94.0%	65.0%
Bitumen insoluble in carbon tetrachloride, not more than	0.5%	0.5%	0.5%
Inorganic matter insoluble in carbon disulfide, not less than	___	1.5%	19.0%
Ductility at 25°C. (77°F.), not less than	100cm	40cm	40cm
Oliensis spot test	Negative	-------	-------

The penetration of the asphalt will be designated by the Engineer as one of the three following grades: 60 to 70; 70 to 85; 85 to 100. Material for any one Contract shall vary not more than 0.02 in specific gravity, nor more than ten degrees Celsius (10°C) softening point within limits specified.

220.12 **Asphalt Cement (100 to150 Penetration)** - Asphalt cement shall be homogenous and free from water, and shall not, on heating, foam below the specified minimum flash point. It shall be prepared by the refining of crude petroleum by suitable methods. A solid native lake asphalt fluxed to the proper consistency with a suitable oil asphalt flux may be permitted. Asphalt cement shall meet the following requirements:

	Oil Bermudez	**Fluxed Trinadad**	**Fluxed Asphalt**
Penetration, 25°C. (77°F.) 100 g, 5 seconds	100-150	100-150	100-150
Flash point (Cleveland Open Cup) (not less than)	230°C	175°C	175°C
Softening Point (Ring and Ball)	40°- 60°C	40°- 50°C	40°- 50°C
Loss on heating 50 g. for 5 hrs at 163°C. (325°F.), not more than	1.0%	3.0%	3.0%
Penetration of residue, 25°C. (77°F.), 100 g., 5 sec.in percent of original penetration, not less than	60	50	50
Total bitumen (soluble in carbon disulfide), not less than	99.5%	94.0%	65.0%
Bitumen insoluble in carbon tetrachloride, not more than	0.5%	0.5%	0.5%
Inorganic matter insoluble in carbon disulfide, not less than	___	1.5%	19.0%
Ductility at 25°C. (77°F.), not less than	100cm	40cm	40cm
Oliensis spot test	Negative	-------	-------

The penetration of the asphalt will be designated by the Engineer as one of the following grades: 100 to 120; or 120 to 150. Material for any one Contract shall vary not more than 0.02 in specific gravity, not more than ten degrees Celsius (10°C.) in softening point within the limits specified.

220.13 **Asphalt Cement (150 to 300 Penetration)** - Asphalt cement shall be homogenous and free from water, and shall not, on heating, foam below the specified minimum flash point. It shall be prepared by the refining of crude petroleum by suitable methods. Asphalt cement shall meet the following requirements:

Penetration, 25°C. (77°F.) 100 g, 5 seconds	150-300
Flash point (Cleveland Open Cup) (not less than)	215°C
Softening Point (Ring and Ball)	30°- 45°C
Loss on heating 50 g. for 5 hrs at 163°C. (325°F.), not more than	2.0%
Penetration of residue, 25°C. (77°F.), 100 g., 5 sec. in percent of original penetration, not less than	60
Total bitumen (soluble in carbon disulfide),not less than	99.5%
Bitumen insoluble in carbon tetrachloride, not more than	0.5%
Oliensis spot test	Negative

The penetration of the asphalt will be designated by the Engineer as one of the three (3) following grades: 150 to 200; 200 to 250; 250 to 300. Material for any one Contract shall

vary not more than 0.02 in specific gravity nor more than ten degrees Celsius (10°C.) in softening point within the limits specified.

220.14 **Emulsified Asphalt** - Emulsified asphalt shall meet the requirements prescribed in AASHTO M 140-56, for the type specified in the Contract.

SECTION 221 AGGREGATE FOR ASPHALTIC CONCRETE

221.1 **Coarse Aggregate** - All coarse aggregate shall consist of sound, durable rock, free from objectionable coatings. When the coarse aggregate is tested in accordance with AASHTO T 96-58 (c) (Los Angeles Abrasion), the percentage of wear shall not exceed fifty (50%) unless otherwise permitted by the Engineer. The percentage of deleterious substances shall not exceed the following values and the sum of percentages of all deleterious substances shall not exceed eight percent (8%).

Deleterious Rock	8.0%
Shale	1.0%
Other Foreign Material	0.5%

221.1.1 Gravel aggregate shall be washed sufficiently to remove any objectionable coating.

221.1.2 The above requirements apply to each size or fraction of aggregate produced.

221.1.3 Pile-run chat, defined as tailings from mills in which metallic minerals are recovered, will not be approved for use in asphaltic concrete unless the chat has been conditioned to meet a specified gradation. A tolerance of seven percent (7%) plus or minus, on each sieve fraction will be permitted provided the aggregate complies with other provisions of this specification.

221.1.4 Coarse aggregate for Type "B" and Type "C" asphaltic concrete mixtures shall be furnished and stockpiled in two (2) or more separate sizes or fractions. One fraction shall consist of material retained in the one-half (1/2) inch sieve, and the other fraction shall consist of material passing the one-half (1/2) inch sieve. A tolerance not to exceed fifteen percent (15%) may be permitted on the one-half (1/2) inch sieve for each fraction. The gradation of coarse aggregate shall be such that the combinations of coarse aggregate fractions, when combined with the fine aggregate, will meet the gradation requirements for the type of asphaltic concrete specified. The various coarse aggregate fractions shall comply with the following requirements:

PERCENTAGE BY WEIGHT

Maximum Size of Fraction	**No. 10 Seive**	**No. 200 Sieve**
2		2.0%
1		2.0%
¾	8.0%	
$^{3}/_{8}$	10.0%	

221.2 **Fine Aggregate**

221.2.1 Fine aggregate for asphaltic concrete shall be a fine, granular material naturally produced by the disintegration of rock of a siliceous nature. Fine aggregate shall be free from cemented or conglomerated lumps and shall not have any coating or injurious material. The percentage of deleterious substances shall not exceed the following values:

Clay lumps and shale	1.0%
Coal and lignite	0.25%
Other deleterious substances	0.1%

221.2.2. Fine aggregate delivered to the coal bin shall be furnished in one fraction. In case two (2) or more fractions of fine aggregate are delivered to the job site, they shall be uniformly blended to form a single material, and the gradation of the blended fine aggregate shall comply with the following gradation limits. The blending shall be done a sufficient distance from the coal feed bins so that the blended stockpile of fine aggregate shall be moved at least once before being fed into the coal bin.

Total Passing 3/8 inch sieve	100%
Passing 3/8 inch and retained on No. 4	0-8%
Passing No. 4 and retained on No. 10	0-12%
Passing No. 10 and retained on No. 40	20-50%
Passing No. 40 and retained on No. 80	25-55%
Passing No. 80 and retained on No. 200	12-35%
Passing No. 200, not more than	4-0%

221.3. **Mineral Filler -** Filler shall consist of stone dust, portland cement, or other artificially or naturally powdered mineral dust approved by the Engineer. It shall be free from foreign or other objectionable material, and shall meet the following gradation requirements:

Passing No. 30 sieve	100%
Passing No. 200 sieve	75-100%
Passing 325 sieve, not less than	30%

SECTION 222 ASPHALTIC CONCRETE PAVEMENT

222.1. **Description** - Asphaltic concrete pavement shall consist of a mixture of mineral aggregate and asphalt cement prepared in a stationary plant and placed in one or more courses on a prepared base or underlying course in conformity with the line, grade, and section shown on the plans.

222.2. **Materials** - All materials shall conform to the following sections of these specifications:

Type	**Section**
Asphalt (60 to 100 Penetration)	220.11
Coarse Aggregate	221.1
Fine Aggregate	221.2
Mineral Filler	221.3

Asphaltic concrete mixture shall consist of mineral aggregates and asphalt cement combined in such proportions that the composition by weight of the finished mix shall be within the following range for the type specified:

TYPE B

	Min	**Max**
Passing 1 inch sieve	100%	--
Passing 1 inch sieve, retained on 3/4 inch sieve	0%	20%
Passing 3/4 inch sieve, retained on 1/2 inch sieve	10%	40%
Passing 1/2 inch sieve, retained on No. 4 sieve	10%	40%
Passing No. 4 sieve, retained on No. 10 sieve	5%	18%
Passing No. 10 sieve, retained on No. 40 sieve	5%	18%
Passing No. 40 sieve, retained on No. 80 sieve	3%	20%
Passing No. 80 sieve, retained on No. 200 sieve	2%	15%
Passing No. 200 sieve 2% 8%		
Asphalt Cement 3.5% 6%		

TYPE C

	Min	**Max**
Passing 1/2 inch sieve 100% ---		
Passing 1/2 inch sieve, retained on 3/8 sieve	0%	25%
Passing 3/8 inch sieve, retained on No.4 sieve	20%	45%
Passing No. 4 sieve, retained on No. 10 sieve	7%	20%
Passing No. 10 sieve, retained on No. 40 sieve	7%	20%
Passing No. 40 sieve, retained on No. 80 sieve	5%	20%
Passing No. 80 sieve, retained on No. 200 sieve	5%	18%
Passing No. 200 sieve	4%	10%
Asphalt Cement	4%	7%

The Engineer may require at the time the job mixture is approved, that not less than 30 percent (30%) of material designated as fine aggregate be incorporated in the mixture. At

least thirty (30) days prior to preparing any of the mixture on the project, the Contractor shall obtain, in the presence of the Engineer or his authorized representative, samples of asphalt and mineral aggregates for tests and shall submit in writing the mixing formula which he proposes to use. The mixing formula shall include the type and sources of all materials, the gradations of the aggregates, the relative quantity of each ingredient and shall state a definite percentage for each sieve fraction of aggregate and for asphalt cement. The samples of materials shall be within the limit of size designated by the Engineer and shall be submitted by the Contractor and at the expense of the Contractor to a reputable testing laboratory, which shall design a mix formula meeting these specifications, a copy of which shall be sent to the Engineer.

No mixtures shall be accepted for use on the project until an approved job mixing formula is approved by the Engineer. In producing mixtures for the project the plant shall be so operated that no intentional deviations from the job mixing formula shall be made except as specifically authorized by the Engineer. In any case the maximum variations from the approved formula shall not be greater than the following requirements and shall be within specifications limits.

Retained on 1/2 inch sieve	5%
Passing 1/2 inch sieve, retained on No. 10 sieve	5%
Passing No. 10 sieve, retained on No. 200 sieve	3%
Passing No. 200 sieve	1%
Asphaltic Cement	0.5%

In addition to these maximum permissible variations from the approved formula, not more than thirty percent (30%) variation will be permitted on the individual sieve fractions between the forty to eighty (40-80) mesh sieve and the eighty to two hundred (80-200) mesh sieve.

The Engineer may make adjustments in the mix formula submitted by the Contractor in order that seventy to eighty percent (70-80%) of the voids in the mineral aggregate shall be filled with asphalt.

In mixtures containing rounded or uncrushed aggregate, it may be necessary for a portion of the aggregate to be a highly angular or crushed material in order to comply with the stability and other requirements. If difficulty is experienced with the aggregate combinations submitted, the Engineer may designate the amount of angular or crushed material necessary after laboratory investigations are made of the combinations proposed by the Contractor.

If the mixing formula submitted for approval or a previously approved mixing formula results in mixtures which are unsatisfactory in the opinion of the Engineer, due to surface texture, workability, segregation tendencies, or for any other reason, the Engineer shall have the right to make any changes within the limits of the specifications which he deems advisable and establish a new mixing formula.

222.3 **Construction Procedure**

222.3.1 **Transportation of Mixture** – The prepared mixture shall be transported from the paving plant to the work in tight vehicles previously cleaned of all foreign materials. The inside of truck beds shall be lubricated with a thin oil to prevent mixture from adhering to the bed, but an excess of lubricant will not be permitted. Each load shall be covered with canvas or other suitable material of sufficient size to protect it from the weather. No loads shall be sent out so late in the day that spreading and compacting of the mixture cannot be completed during daylight.

222.3.2 **Application of Primer** - The prime coat, when specified, shall be applied as set forth in **Section 223**.

222.3.3 **Spreading of the Mixture** - The base course, primed surface, or preceding course shall be cleaned of all dirt, packed soil, or any other foreign material prior to spreading the asphalt mixture. Asphaltic concrete shall not be placed on any portion of an aggregate base when the moisture content of the top two (2) inches of the base is more than two-thirds (2/3) of the optimum moisture.

The mixture, when delivered to the spreading and finishing machine shall have a temperature of not less than two hundred degrees Fahrenheit (200˚F.) and be within twenty-five degrees Fahrenheit (25˚F.) of that designated by the Engineer. It shall spread only when the prepared grade or preceding course is dry. Bituminous material shall not be mixed or placed when the atmospheric temperature is below forty degrees Fahrenheit (40˚F.) or when there is frost in the subgrade, or any other time when weather conditions are unsuitable for the type of material being placed.

The thickness and width of each course shall conform to the typical section in the Contract. The Contractor may construct each course in any number of layers he chooses but no individual layer shall have a compacted thickness greater than three (3) inches for Type B material and four (4) inches for Type C material.

For pavements having a width of sixteen (16) to twenty-four (24) feet, inclusive, the asphaltic concrete pavement shall be laid in lanes approximately one-half (1/2) the full width of the completed pavement and the full width

completed as soon as practicable. Unless otherwise permitted, a single lane of any course shall not be constructed to a length, which cannot be completed to full width of the pavement in one day's operation. For pavement greater than twenty-four (24) feet in width, single lane width constructed shall be limited to one day's production and completion to full width shall be accomplished as soon as practicable.

Except as otherwise permitted herein, the mixture shall be spread by means of an approved mechanical spreading and finishing machine of a type that will uniformly spread the mixture to obtain the required compacted thickness designated in the Contract. No segregation will be permitted in handling the mixture at the plant, from the truck, or during spreading operations on the roadway. The spreading and finishing machine shall spread the mixture and strike it off so that the surface is smooth and true to cross section, free from all irregularities, and of uniform density throughout. All courses shall be feathered out, by hand raking if necessary, in transitioning, the depth of the surface to meet present grades at end of projects to provide a uniform smooth riding surface free of irregularities

When the asphaltic concrete construction consists of more than a single course, each course shall be compacted as specified and allowed to cool throughout to the atmospheric temperature before the next course is placed. The Contractor shall keep traffic off the asphaltic concrete until it has cooled for a sufficient period of time to prevent flushing of the asphalt to the surface, marking or distorting the surface, or breaking down the edges. Normally, this time will vary from two (2) to four (4) hours, depending on the atmospheric and temperature conditions. The final course shall be laid in the same sequence over the entire project as the previously constructed courses unless otherwise approved by the Engineer.

222.3.4 **Wedge Course -** Since one of the primary objectives of this construction is to obtain the smoothest possible riding surface, the existing roadbed surface will be studied by the Engineer to determine the location's thickness of wedge courses. This procedure may result in wedging operations over small areas, and rigid control of placement thickness will be required to insure desired feather-edging at high points and ends of wedge areas. Wedge course, consisting of a layer of asphaltic concrete of variable thickness used to eliminate irregularities in the existing base, shall be spread uniformly to the desired profile grade and cross section. The use of an approved finishing machine will be required on all work. Type C mixture shall be used for all wedge course.

Compaction of asphaltic mixtures shall consist of initial or break-down

rolling, intermediate rolling, and final or finish rolling. Except for projects

involving small quantities of mixture, initial rolling shall be performed with three (3) wheel rollers or two (2) wheel tandem rollers weighing from eight (8) to twelve (12) tons. Intermediate rolling shall be done with oscillating type pneumatic-tire rollers if required by the Engineer; otherwise it shall be done with either two (2) or three (3) wheel tandem rollers. Final rolling shall be done with either two (2) or three (3) wheel tandem rollers weighing not less than ten (10) tons. Rollers shall be operated at a speed of not more than three (3) miles per hour and in a manner that will avoid shoving, cracking or displacing the mixture during the compacting period. The Contractor shall furnish a sufficient number of rollers to compact and finish satisfactorily the amount of mixture being placed.

The mixture shall be rolled when it is at the proper temperature to receive the roller and when rolling does not cause undue displacement or shoving. This proper temperature varies with the atmospheric condition and type of mixture. Initial compaction shall be done when the mixture has cooled just sufficiently to receive the roller. Intermediate and final compaction shall be done while the mixture is warm and malleable enough to respond to the kneading action of the roller. Rolling shall begin at the sides and progress gradually to the center of each land. Rollers shall move parallel to the center line of the roadway and uniformly lap each preceding track. Alternate trips of the roller shall be terminated in steps to prevent the formation of surface irregularities. The alternate stops shall be spaced in such a manner that any excess water will drain quickly. Lateral or diagonal rolling may be permitted to remove high spots, provided the rolling is done in such a manner and at such a time that shoving or cracking will not result. To prevent adhesion of the mixture, steel roller wheels shall be properly moistened, but an excess of water will not be permitted.

All mixtures shall be thoroughly compacted, and rolling shall be continued until no further compaction is being obtained. Except as otherwise specified, all compacted mixtures shall have a density not less than ninety-eight percent (98%) of that obtained by the laboratory compaction of an identical mixture.

Along curbs, headers, manholes and similar structures and at all places not accessible to the roller, thorough compaction must be secured by means of hot tampers and at all contacts of this character the joints between these structures must effectively sealed.

The compacted course shall be free of surface irregularities and shall conform to the grade and dimensions shown on the plans. Weak areas resulting from excess quantities of asphalt, segregation of aggregate or asphalt, areas which become loose or broken, mixed with dirt, or are in any way defective, shall be removed and replaced with fresh hot mixture, compacted to conform with the surrounding area, at the Contractor 's expense.

222.3.5 **Joints -** Longitudinal and transverse joints shall be made in a careful manner. Well bonded and sealed joints are required. Joints between old and new pavements, or between successive day's work shall be carefully made in such a manner as to insure thorough and continuous bond between the old and new surfaces. Hot soothers or tampers shall be carefully employed in such a manner as to heat up the old pavement sufficiently (without burning it) to insure a proper bond. Before placing mixture against them, all contact surfaces of dry longitudinal joints, curbs, gutters, headers, manholes, etc., shall be painted with a thin uniform coating of primer. In making the joint along any adjoining edge such as a curb, gutter, or an adjacent paving and after the hot mixture is placed by the finishing machine, just enough of the hot material shall be carried back to fill any space left open. The joint shall be properly "set-up" with the back of rake at proper height and level to receive the maximum compression under rolling. The work of "setting-up" this joint shall be performed always by competent workmen who are capable of making a correct, clean, and neat joint.

222.3.6 **Testing Pavement** - The finished courses shall have the thickness shown on the plans and shall be free from waves or irregularities and shall not vary from a ten (10) foot straight-edge, applied parallel to the center line, by more than one-half (1/2) inch on the first or intermediate courses and not more than one-eighth (1/8) inch on the surface course.

SECTION 223 PREPARATION OF BASE AND APPLICATION OF PRIMER

223.1 **Description -** Preparation of base and application of primer shall consist of applying a primer to a prepared base. The type and grade of prime material to be used will be specified in the Contract.

223.2 **Materials -** All materials shall conform to the following sections of these specifications:

Item	**Section**
Type RC Liquid Asphaltic Materials	220.8
Type MC Liquid Asphaltic Materials	220.9
Asphalt (60 to 100 Penetration)	220.11
Emulsified Asphalt	220.14

The quantity of asphalt in emulsified asphalts may be reduced to thirty-five percent (35%) when directed by the Engineer. Material meeting the requirements of **Section 220.8** and **Section 220.11** shall be diluted with naphtha in a manner approved by the Engineer.

223.3 **Equipment -** The equipment required on this work shall consist of a pressure distributor meeting the requirements specified below and other approved equipment including a five (5) ton roller. The pressure distributor shall be designed and equipped with pressure gauges to enable the operator to control the flow and to distribute the primer under a uniform pressure of not less than twenty-five (25) pounds per square inch. The distributor shall be equipped with proper adjustments to insure uniform application of primer in the amount specified over the area of the surface designated. Adjustable length, spray bars shall be operated a proper distance above the ground to insure a fifty percent (50%) lap of the sprays from adjacent jets. A thermometer well and an accurate thermometer shall be located on the distributor so that it is readily accessible at all times. The calibration of all distributors will be approved by the Engineer and the Contractor shall furnish all equipment, materials, and assistance necessary if calibration is required.

223.4 **Construction Procedure -** Preparation of Base.

223.4.1 **Absorbent Surface -** When the base consists of bound aggregate, loose gravel, or stone, the existing surface shall be prepared by wetting, if necessary, and blading and rolling unless otherwise specified. These operations shall continue until a smooth, uniform and compact surface is obtained, and shall be performed just prior to applying the primer. The surface shall be slightly damp and firm when primer is applied, no direct payment will be made for furnishing or applying any required water.

223.4.2 **Non-absorbent Surface -** When the base is of concrete, brick, or other non-absorbent surface, the surface of the base shall be cleaned of all dust, loose material, grease or other foreign material, and shall be maintained in this condition until the primer is applied. Any fat bituminous surface mixture or

bituminous joint material will be removed by others without cost to the Contractor before the primer is applied. If sixty to one hundred (60-100) Penetration Asphalt is permitted as an alternate for RC-0 for primer on non-absorbent type of surface, the penetration asphalt shall be cut back by the addition of naphtha to produce a final product that is the approximate equivalent of RC-O. The naphtha used shall have an initial boiling point of not less than one hundred eighty degrees Fahrenheit (180°F.) and an end point not greater than three hundred fifty degrees Fahrenheit (350°F.). The prepared and primed base shall meet the requirements of the specification relating to such work at the time it is covered, regardless of when the primer is applied. The surface of the base shall be dry when the primer is applied, except in the case of emulsion primer.

The primer shall be applied at a rate as specified in the Contract, or as revised

by the Engineer within the following limits:

Type of Surface	**Rate(gallons per square yard)**	
	Minimum	**Maximum**
Absorbent	0.2	0.5
Non-absorbent	0.02	0.1

The primer shall be heated at the time of application to a temperature designated by the Engineer in accordance with the limits provided in Section 220.7, Application Temperatures of Bituminous Materials. Pools of primer material remaining on the surface after the application shall be removed. The primer shall be properly cured and the primed surface shall be cleaned of all dirt and surplus sand, before the next course is placed.

Unless otherwise permitted, whenever it is necessary to carry traffic over the roadway during priming operations, the prime coat for absorbent surfaces shall be applied in lanes approximately one-half (1/2) the width of the base at a time and shall be permitted to cure before application is made to the remaining one-half (1/2) width. The prime coat for non-absorbent surfaces may be applied full width, provided the primed surface including entrances and side streets is blotted with sand in such quantity as directed by the Engineer before it is opened to traffic.

Primer shall be applied only when the atmospheric temperature is above fifty degrees Fahrenheit (50°F.), and when ground and other conditions are favorable. Unless sand or some other blotting material is specified, the Contractor shall prevent traffic from using the primed surface until it is cured.

It shall be the Contractor 's responsibility to maintain or restore the completed primed surface in such a manner that a smooth, uniform surface will be available for the next course.

223.5 **Method of Measurement -** Measurement of bituminous material to the nearest ten (10) gallons will be made as specified in **Section 220.2**, Measurement of Liquid Bituminous Materials.

Measure of material for sanding primer will be made to the nearest ton, weighed in the vehicle at such location as may be directed by the Engineer.

SECTION 225 PLANT MIX BITUMINOUS BASE COURSE

225.1 **Description -** This work shall consist of aggregate, filler if needed, and asphalt binder mixed in a stationary bituminous mixing plant in such proportions that the resulting mixture meets the grading requirements of the job-mix formula. The mixture shall be placed, spread and compacted in conformity with the lines, grades, thicknesses and typical cross sections shown on the plans or established by the engineer.

225.2 **Material -** All material shall as follows:

225.2.1 **Coarse Aggregate -** All coarse aggregate shall consist of sound, durable rock, free from cemented lumps or objectionable coatings. When tested in accordance with AASHTO T 96, the percentage of wear shall not exceed 50. The percentage of deleterious substances shall not exceed the following values and the sum of percentages of all deleterious substances shall not exceed 8.0 percent.

Item	**Percent by Weight (Mass)**
Deleterious Rock	8.0
Shale	1.0
Other Foreign Material	0.5

The requirements of this section apply to each size or fraction of aggregate produced.

At least 60 percent of the particles retained on a No. 4 sieve, for use in bituminous mixtures shall have two or more mechanically induced faces.

If a density requirement is specified for asphaltic concrete, the total quantity of chert in each size or fraction of produced crushed stone aggregate, including that permitted as deleterious, shall not vary more than 10 percentage points from the quantity present in the aggregates used in the approved laboratory job mixtures.

Crushed stone shall be obtained from rock of uniform quality. Rock tested form individual ledges for preliminary source approval shall meet the following criteria. Los Angeles Abrasion, AASHTO T 96, percent loss, max 50 Absorption, AASHTO 85, percent, max 4.0.

225.2.2 **Fine Aggregate -** Fine aggregate for asphaltic concrete shall be a fine, granular material naturally produced by the disintegration of rock of a siliceous nature and/or manufactured by the mechanical reduction of sound durable rock with a percentage of wear not exceeding 50 when tested in accordance with AASHTO T 96. With written approval of the engineer and compliance with this specification, chat sand produced from flint chat in the Joplin area, dolomite chat as produced in the southeast lead belt area or fines

manufactured from igneous rock and chert gravel or wet bottom boiler slag may be used as fine aggregate for asphaltic concrete. Fine aggregate shall be free from cemented or conglomerated lumps and shall not have any coating or injurious material. The fraction passing a No. 40 sieve shall be non-plastic. The percentage of deleterious substances shall not exceed the following values:

Item	**Percent by Weight (Mass)**
Clay lumps and shale	1.0
Total lightweight (low mass density) particles, including coal and lignite	0.5
Other deleterious substances	0.1

Lightweight (Low mass density) sand particles are not considered deleterious lightweight (low mass density) particles. The total lightweight (low mass density) particles requirement shall not apply to wet bottom boiler slag, angular chert sand or manufactured sand.

Natural aggregate delivered to the cold bin shall be furnished in one fraction and shall meet the following gradation requirements. If the material is produced by use of two or more fractions, they shall be thoroughly blended at the site of original mixing to form a single material of uniform gradation. Further, if the blending is performed at the job site, it shall be done a sufficient distance from the cold feed bins so that the blended stockpile of fine aggregate will be moved at least once before being fed into the cold bin.

	Sieve Size	**Percent**
Passing by Weight (Mass)		
	3/8 inch	100
	No. 200	0-6

Fine aggregate manufactured by the mechanical reduction of sound durable rock shall be delivered to the cold feed in one fraction, separate from any natural fine aggregate and shall meet the following gradation requirements.

Sieve Size	**Percent Passing by Weight (Mass)**
3/8 inch	100
No. 4	85-100
No. 200	0-8

225.2.3 **Mineral Filler** - Mineral filler shall consist of limestone dust, portland cement or other suitable mineral matter. Mineral filler shall be thoroughly dry and free of lumps consisting of aggregations of fine particles. When tested in accordance with AASHTO T 37 the mineral filler shall conform to the following gradation requirements:

Sieve Size	**Percent Passing by Weight (Mass)**
No. 30	100
No. 50	95-100
No. 100	90-100
No. 200	0-100

225.2.4 **Hydrated Lime** - Hydrated lime shall be thoroughly dry and free of lumps. It shall comply with AASHTO M 303, Type I or II, except the gradation shall be determined in accordance with AASHTO T 37.

225.3 **Gradation** - The gradation of coarse aggregate shall be such that the total aggregate meets the gradation requirements specified in this section prior to being fed into the cold aggregate feeders.

225.4 **Screenings** - When screenings are used, they shall be considered coarse aggregate consisting of tough, durable particles of approved quality, and shall be free from dirt or other objectionable material. The fraction passing a No. 40 sieve shall be non-plastic.

225.5 **Composition of Mixtures** - The bituminous base shall be composed of a mixture of crushed limestone or dolomite, except as hereinafter permitted, filler if needed, and asphalt binder. The total aggregate prior to mixing with asphalt binder shall meet the following gradation requirements:

Sieve Size	**Percent Passing by Weight (Mass)**
1 inch	100
1/2 inch	60-90
No. 4	35-65
No. 8	25-50
No. 30	5-12

At the option of the contractor, fine aggregate may be incorporated into the mixture. The total quantity of such fine aggregate shall not exceed 30 percent by weight (mass) of the combined aggregate and shall be added at the plant by means of a separate cold aggregate feeder.

225.6 **Composition** - The composition of the mixture shall be as directed by the engineer and shall conform to the following limits by weight (mass):

Item	Percent
Total Mineral Aggregate	94-97
Asphalt Binder	3-6

225.7 No job- mix formula will be approved when it fails to fall within the limits specified in **Sections 225.5** and **225.6.** The full tolerances shall be applied as specified in **Section 225.10** for asphalt binder and not less than 1/2 the tolerances shall be applied as specified in **Section 225.10** for material passing the No. 8 sieve and the material passing the No. 200 sieve. The job- mix formula approved for the mixture shall be in effect until modified in writing by the engineer. When unsatisfactory results or other conditions make it necessary, or should a source of material be changed, a new job- mix formula may be required.

225.8 The engineer will make such changes in the proportions of asphalt binder and aggregates as considered necessary. The proposed mixture will be compacted and tested in the laboratory in accordance with AASHTO T 167 or AASHTO T 245, at the option of the engineer and modified as follows. The test method used shall be modified by aging the mixture for two hours, at the specified compaction temperature range of the asphalt binder, just prior to compaction of the specimens. The mixture of mineral aggregate and asphalt binder shall result in a bituminous mixture, which will be durable and retain satisfactory cohesion and stability in the presence of moisture.

225.9 Moisture susceptibility may be tested in accordance with AASHTO T 283 or AASHTO T 165, at the option of the engineer. A minimum retained strength of 70 percent shall be obtained when tested for moisture susceptibility. If requested by the contractor, hydrated lime may be added to increase retained strength to a passing level.

225.10 **Gradation Control** - In producing mixtures for the project, the plant shall be so operated that no intentional deviations from the job-mix formula are made. Mixtures as produced shall be subject to the following tolerances and controls:

225.10.1 The total aggregate gradation shall be within the master range specified in **Section 225.5**.

225.10.2 The maximum variations from the approved job- mix formula shall be within the following tolerances:

Passing No. 8 sieve ±5.0 percentage points
Passing No. 200 sieve ± 2.0 percentage points

225.10.3 The quantity of asphalt binder introduced into the mixer shall be that quantity specified in the job-mix formula. No change may be made in the quantity of

asphalt binder specified in the job- mix formula without written approval of the engineer. The quantity of asphalt binder determined by calculation or tests on the final mixture shall not vary more than 0.5 percentage point from the job- mix formula.

225.11 The gradations of the total aggregate will be determined from samples taken from the hot bins on batch- type plants or continuous mixing plants or from the composite cold feed belt on drum mix plants. Batch-type or continuous mixing plants shall have a screening unit, which separates the usable heated aggregate into at least two sizes. One of the aggregate bin sizes produced by the screening unit shall contain not more than 10 percent by weight (mass) retained on the No. 4 sieve.

225.12 **Commercial Mixture** - If specified in the contract that an approved commercial mixture may be used, the contractor shall, at least seven days prior to the desired time of use, furnish a statement setting out the source and characteristics of the mixture proposed to be furnished. The statement shall include: (1) the types and sources of aggregates, percentage range of each and range of combined gradation; (2) the percent and grade of asphalt binder; and (3) the mixing time and range of mixture temperature. The plant shall be designed and operated to produce a uniform, thoroughly mixed material free from segregation. A field laboratory will not be required. If the proposed mixture and plant are approved by the engineer, the component material and the mixture delivered will be accepted or rejected by visual inspection. The supplier shall furnish with the first truck load of each day's production, a certification in triplicate that the material and mixture delivered are in conformance with the approved mixture. Upon completion of the work, a plant certification in triplicate shall be furnished by the supplier for the total quantity delivered. The mixture shall be placed in accordance with the requirements specified in **Sections 225.15** through **225.20** and shall be compacted as specified in **Section 225.19**.

Construction Requirements

225.13 **Weather Limitations** - Bituminous mixtures shall not be placed (1) when either the air temperature or the temperature of the surface on which the mixture is to be placed is below 40 F, (2) on any wet or frozen surface, or (3) when weather conditions prevent the proper handling or finishing of the mixture.

225.14 **Sub-grade Preparation** - The sub-grade upon which the bituminous mixture is to be placed shall be prepared in accordance with **Section 205**.

225.15 **Spreading** - The base course, primed surface or preceding course or layer shall be cleaned of all dirt, packed soil or any other foreign matter prior to spreading the bituminous mixture. When delivered to the roadbed, the mixture shall be at a temperature which will permit proper placement and compaction. The mixture shall be spread with an approved spreading and finishing machine in the number of layers and in the quantity required to obtain the compacted thickness and cross section shown on the plans. When placing multiple layers with varying thicknesses, the thicker layer shall be placed first.

The compacted thickness of a single layer shall be between 3 and 4 inches, except as follows:

225.15.1 For spot- leveling and leveling course work, the layer thickness may be less.

225.15.2 For base widening, the material may be placed in two layers, provided no individual layer has a compacted thickness greater than 7 inches.

225.16 The mixture shall be spread without tearing the surface and struck off so that the surface is smooth and true to cross section, free from all irregularities, and of uniform density throughout. Care shall be used in handling the mixture to avoid segregation. Areas of segregated mixture shall be removed and replaced with suitable mixture. The outside edges of the base shall be constructed to an angle of approximately 45 degrees with the surface of the roadbed. The outside edge alignment shall be uniform and any irregularities shall be corrected by adding or removing mixture before compacting.

225.17 **Leveling Course** - If required by the contract, a leveling course consisting of a layer of variable thickness shall be spread to the desired grade and cross section to eliminate irregularities in the existing surface. Spot- leveling operations over small areas, with feather-edging at high points and ends of spot areas, may be required prior to placing the leveling course. Rigid control of the placement thickness of the leveling course will be required. The use of an approved finishing machine will be required on the spot- leveling and the leveling course, except that the spreading of the spot- leveling with a blade grader will be permitted if results indicate the mixture is practically free from segregation.

225.18 **Joints -** Longitudinal and transverse joints shall be carefully made and well bonded. The minimum density of all traveled way pavement within 6 inches of a longitudinal joint, including the pavement on the traveled way side of the shoulder joint, shall not be less than 2.0 percent below the specified density. Once an established procedure has been demonstrated to provide the required density for longitudinal joints, at the engineer's discretion, the procedure may be used in lieu of density tests provided no changes in the material, typical location or temperatures are made. Pay adjustments due to longitudinal joint density shall apply to the full width of the traveled way pavement and shall be in addition to any other pay adjustments. Transverse joints shall be formed by cutting back on the previous run so as to expose the full depth of the layer. When a transverse vertical edge is to be left and opened to traffic, a temporary depth transition shall be built as approved by the engineer. The longitudinal joints in one layer shall offset those in the layer immediately below by approximately 6 inches.

225.19 **Compaction** - Rolling shall begin as soon after spreading the mixture as it will bear the weight (mass) of the roller without undue displacement. All rollers shall be in satisfactory condition capable of reversing without backlash, and steel wheel rollers shall be equipped with scrapers. Rollers shall have a system for moistening each roll or wheel. A trench roller shall be used on depressed areas inaccessible to regular width equipment. The compacted mixture shall have a density of not less than 95 percent of that obtained by the laboratory compaction of a specimen made in the proportions of the approved mixture.

225.20 **Surface Tolerance -** The finished layers shall be substantially free from waves or irregularities and shall be true to the established crown and grade. At transverse construction joints the surface of all layers shall not vary from a 10-foot straightedge, applied parallel to the center line, by more than 1/4 inch, except that the entire surface of the final layer of plant mix bituminous base mixture shall not vary from the 10-foot straightedge by more than 1/8 inch if this layer is used as the final riding surface course. Areas exceeding this tolerance shall be re-rolled, replaced or otherwise corrected in a manner satisfactory to the engineer.

The surface of the mixture after compacting shall be smooth and true to the established crown and grade. Any mixture showing an excess of bituminous material or that becomes loose and broken, mixed with dirt, or is in any way defective shall be removed and replaced with satisfactory mixture, which shall be immediately compacted to conform with the surrounding area.

225.21 During construction, the engineer will make as many tests as are necessary to ensure that the course is being constructed of proper thickness, composition and density.

SECTION 230 PORTLAND CEMENT CONCRETE

230.1. **Description** - Portland cement concrete shall consist of a mixture of portland cement, fine aggregate, coarse aggregate, and water combined in the proportions specified for the various classes of concrete. Admixtures for the purpose of entraining air, retarding or accelerating the set, tinting and other purposes may be added as specifically required or permitted.

230.2. **Materials**

230.2.1 Portland cement shall conform to the requirements of ASTM Specifications C 150 and C 175, Type 1 or Type 1-A cement shall be used for all concrete work unless otherwise specified by the Engineer. The Contractor shall submit evidence to the Engineer that the portland cement conforms to ASTM Specifications C 150 and C 175.

If Type 1 is selected it shall be used with an air entraining admixture added at the plant to produce three to six percent (3% - 6%) air in the concrete. If Type 1-A cement is selected it also shall produce from three to six percent (3% - 6%) air in the concrete.

230.2.2 Concrete air entraining admixtures shall conform to the requirements of ASTM Specifications C 260 and C 233 as last revised except as permitted by the Engineer. In order to obtain approval for the use of any air entraining agent, the Contractor shall submit to the Engineer evidence that the agent conforms to the requirements of ASTM C 260 and C 233 as last revised.

230.2.3 Fine aggregate shall consist of clean natural sand of hard, sharp, durable and uncoated, grains. The amount of deleterious substances shall not exceed the following limits:

Item	**Percent by weight**
Clay lumps	0.25
Coal and lignite	0.25
Material passing No. 200 sieve	3.00
Other deleterious substances	0.10

All fine aggregate shall be from injurious amounts of organic impurities.

The gradation of the fine aggregate shall conform to the following sieve analysis when tested by the Standard U.S. Sieve Analysis:

Sieve Size	Percent Passing
3/8	100%
4	95-100%
20	40-70%
50	5-20%
100	0-5%

230.2.4 Coarse aggregate shall consist of either gravel or crushed stone of sound, durable, and uncoated particles. Gravel shall be washed clean. The coarse aggregate shall meet the purity and soundness requirements of the Missouri Department of Transportation.

Crushed stone shall be of uniform quality. The percentage of wear shall not exceed fifty (50%) when tested in accordance with AASHTO Specification T-96-58 (c) (Los Angeles Abrasion Test).

Gravel shall be washed when tested in accordance with AASHTO T-96-58 (c) (Los Angeles abrasion test). The percentage of wear shall not exceed forty-five (45%).

The percentage of deleterious substances shall not exceed the following values. The sum of percentages of all deleterious substances, exclusive of Items 5 and 6, shall not exceed six percent (6%).

Item	Percent by Weight
Deleterious rock	5%
Shale	1%
Chert in limestone	4%
Other foreign material	0.5%
Material passing No. 200 sieve	2.0%
Thin or elongated pieces	5.0%

The gradation shall conform to the following limits based on the standard sieve sizes:

Size Sieve	Percentage Passing
1 1/2 inch	100%
1 inch	95-100%
1/2 inch	25-60%
No. 4	0-8%
No. 10	0-3%

230.2.5 The water used for mixing and curing concrete shall be clean and free from acid, salt, oil, and other organic matter harmful to the concrete. The use of potable water is required.

230.2.6 Calcium chloride shall conform to AASHTO Specifications M144-57. Calcium chloride shall be sampled and tested in accordance with ASTM Specifications D 345-48.

230.3 **Mix Design** - The proportions of the various ingredients for portland cement concrete shall be as specified by the Engineer within applicable limits of the specifications for the class of concrete designated by the Contract. The mix set by the Engineer will be based upon the materials intended for the use in the work, and if sources of supply are changed, the mix may be revised.

230.4 **Class of Concrete**

230.4.1 **Class A** concrete shall contain six (6) sacks of cement to the cubic yard (one sack of cement - ninety-four (94) pounds). The water content shall not exceed six (6.0) U.S. gallons per sack of cement including the surface moisture in the aggregate.

230.4.2 **Class AA** concrete shall contain seven (7) sacks of cement to the cubic yard. The water content shall not exceed six (6.0) U.S. gallons per sack of cement.

230.4.3 **Class B** concrete shall contain five (5) sacks of cement to the cubic yard. The cement water content shall not exceed six and a half (6.5) gallons per sack of cement.

230.5. **Mixing** - The concrete may be mixed on the site as in case of a paving machine mixed, at a central mixing plant, or mixed in transit. In all cases the concrete shall be agitated and mixed until there is a uniform distribution of the materials and shall be discharged completely before the mixer is recharged.

230.5.1 In the case of ready-mix concrete, the concrete shall be discharged within sixty (60) minutes and the time required between start and completion of discharge shall not exceed fifteen (15) minutes. If the length of time is greater than sixty (60) minutes, the load of concrete shall be rejected at the expense of the Contractor. The ready-mix concrete shall be mixed and

delivered in accordance with the requirements set forth in standard specification for ready-mix concrete ASTM C 94.

230.5.2 Ready-mix concrete shall be produced by a plant which has been approved by the Missouri Department of Transportation and the Engineer.

230.6 **Inspection and Tests**.

230.6.1 All materials shall be subject to inspection by the Engineer at all times.

230.6.2 The strength of the concrete shall be tested by either the standard compression test as designated by ASTM Specification C 39-49 or the concrete flexure test as designated by ASTM Specification C 78.

The City or its representative may take samples of the concrete delivered to the job for making concrete tests and the testing of the specimens will be done at the City's expense.

Slump tests may be made by the City in accordance with ASTM Specifications C 143. Slumps shall not exceed the maximum designated for the class and use of the concrete.

All equipment and tools which are used for material handling and performing all parts of the work must meet the approval of the Engineer. The equipment must be kept in full and good working order.

SECTION 231 PORTLAND CEMENT CONCRETE PAVEMENT

231.1 **Work Included** - This work shall consist of the construction of portland cement concrete placed with or without reinforcement on a prepared sub-grade. The type and dimensions of the pavement will be indicated by the typical section on the construction plans.

231.2 **Materials** - Concrete used in the construction of portland cement concrete pavement shall be **Class "A"** concrete, unless specified otherwise, and all materials, proportioning, air-entrainment, mixing, and transporting for portland cement concrete shall be in accordance with **Section 230**, Portland Cement Concrete.

Reinforcing steel shall conform to **Section 238**, Reinforcement for Portland Cement Concrete.

231.3 The sub-grade shall be graded, compacted and rolled to insure maximum density to the exact cross section and elevations and shall be tested with an approved template before concreting. High areas shall be reduced to grade and low areas raised to grade with approved material compacted in place, as directed.

The sub-grade shall be moistened in advance of concreting but shall not be muddy or excessively wet.

231.4 Forms shall be of steel or of wood two (2) inches thick, dressed on the top and inside. Built up, battered, bent, twisted, broken or dirty forms shall not be used. Flexible forms may be used for curves of radii less than one hundred (100) feet. Forms shall be cleaned and oiled before use and shall be securely staked and braced and have rigid, tight connections at joints. Face forms are required when forming integral curbs.

231.5 The concrete shall be placed with a minimum of rehandling to avoid segregation. No concrete that has partially hardened or has been contaminated by foreign material shall be deposited on the work, nor shall re-tempered concrete be used. All concrete shall be thoroughly compacted by spading or vibrating to eliminate the voids. Care shall be exercised particularly at and about form and joints to avoid formation of voids or honeycombs and to prevent damage to joint installations.

231.6 Expansion and contraction joints may be sawed or premoulded and shall be installed as indicated, at right angles to the grade and length of the street unless shown otherwise on the plans. Sawed grooves shall have a depth of at least one-fourth (1/4) the thickness of the concrete and shall be filled with a bituminous joint sealing material.

231.6.1 **Premoulded Expansion Joints** - Three-fourths (3/4) inch premoulded bituminous filler shall be installed as noted on the plans, and at all connections with existing concrete structures. Expansion joint materials shall be cut to the full depth of the pavement and integral curb cross section. The top of the expansion joint shall be scraped free of mortar.

231.6.2 **Premoulded Contraction Joints** - Contraction joints of one-eighth (1/8) inch pressed fiber material shall be installed at intervals of not more than twenty (20) feet.

231.6.3 **Longitudinal Joints** - Dimensions of the key are indicated on the plans.

231.6.4 **Construction Joints** - Construction joints shall be located at the regular location of a contraction joint or not less than ten (10) feet from any other joint. Butt type joints shall have dowels on two (2) foot centers extending at least six (6) inches into and out of the concrete.

231.6.5 Transverse contraction joints of pre-moulded pressed fiber material, dimensions of which are shown on the drawings, shall be installed at intervals of not more than twenty (20) feet.

231.6.6 Dowel bars shall be used to transfer load across all expansion joints or in other locations as shown on the plans. The diameter and length of bars shall be as shown on the plans. Dowel bars shall be smooth round rail or billet steel bars placed as shown on the drawings, and shall be held in position exactly parallel to the surface and center line of the slab by a metal device that shall be left in the pavement. The use of stone, brick or other bulk material for supporting dowels or sleeves will not be permitted. One-half (1/2) of each bar shall be coated with basic lead sulphate, blue lead or red lead paint and with a heavy oil (not grease) to prevent bond. The painted and oiled end of the bar shall also be furnished with an approved paper or metal sleeve so designed as to provide a three-fourths (3/4) inch space at that end of the bar.

231.6.7 **Sawed Joints** - Sawed joints shall be provided at a maximum of twelve (12) foot for a six (6) inch slab and fifteen (15) foot for a seven (7) inch slab using a special concrete saw which has one or more circular blades at least one-eighth (1/8) inch thick. These may be reinforced abrasive blades or steel blades inlaid with diamonds (or other types that meet with the approval of the Engineer). In either case the blades shall be cooled and lubricated abundantly with cold water. The joints must be cut early, before shrinkage stresses have caused the formation of early cracks.

231.6.8 **Joint Filler** - After the pavement has been properly cured, all open joints including expansion joints, construction joints, and longitudinal joints, shall be cleaned, primed with a light grade of cut-back asphalt, and poured full of an approved hot poured joint sealing compound. The joint sealing compound shall be heated and applied in strict accordance with instructions of the manufacturer. Joints must be clean and dry before seal is poured and sealing compound shall be poured so that the joint is filled to the level of the adjacent concrete surfaces.

231.7 The paving machine must be checked and inspected by the Engineer before work begins. The paving machine may at no time be operated on the finished concrete or on the base, which is to be paved, unless permission is granted by the Engineer.

231.8 The temperature of the concrete shall be between sixty and ninety degrees Fahrenheit (60° - 90° F.) when placed in the forms.

231.9 **Cold Weather Construction** - All cold weather concrete construction is derived from ACI Manual of Concrete Practice. All policies will be strictly adhered to. Specific questions will be referenced through ACI.

231.9.1 **Definition** - Cold weather is defined as a period when, for more than 3 consecutive days, the following conditions exist: (1) the average daily air temperature is less than 40° F and (2) the air temperature is not greater than 50° F for more than one-half of any 24-hr period.

231.9.2 **Sub-grade Temperature** - Under no circumstances may the concrete be placed on a frozen sub-grade. Concrete injured by frost action shall be removed and replaced at the Contractor 's own expense. Temperature will be ascertained on site by infrared thermometer.

231.9.3 **Ambient Temperature** - Under no circumstances may concrete be placed when the ambient air temperature is 32˚ F and below. Temperature will be ascertained on site by infrared thermometer.

231.9.4 **Placement Temperature** - The temperature of the concrete shall be between sixty and ninety degrees Fahrenheit (60° - 90° F.) when placed in the forms.

231.9.5 **Concrete Temperatur**e - The minimum temperature of concrete immediately after placement shall be as specified in Column 2 of Table A of this section.

TABLE A		
1	**2**	**3**
Least dimension of section, inches	*Minimum temperature of concrete as placed and maintained during the protection period*	*Maximum gradual decrease in surface temperature during any 24 hour after end of protection*
Less than 12 in.	*55*	*50*
12 in. to less than 36 in.	*50*	*40*
36 in to 72 in.	*45*	*30*
Greater than 72 in.	*40*	*20*

231.9.6 **Protection Temperature** - The minimum temperature of concrete during the protection period shall be as shown in Column 2, Table A of this section.

231.9.7 Concreting shall be discontinued when the temperature falls below 40° F unless the aggregates or the water are heated to produce the temperatures in **Section 231.8** above. However, the Engineer may require that no concrete be poured when in his opinion the concrete might become damaged from freezing due to subsequent falling of the temperature.

231.9.7.1 Mixing water shall be heated to a maximum of 150˚ F.

231.9.7.2 Aggregates shall be heated until free of all ice and frost.

231.9.7.3 All covering and heating equipment shall be on hand and approved by the Engineer before any concrete is placed.

231.9.7.4 The use of an accelerator such as calcium chloride, Type III (meeting ASTM C 150) or 100 lb/yd^3 of additional cement shall be used only with the consent of the Engineer.

231.9.8 **Protection of Concrete against freezing** - Cure and protect concrete against damage from freezing for a minimum period of 3 days, unless otherwise specified. Maintain the surface temperature of the concrete during that period in accordance with Column 2, Table A of this section. Protection will be performed by applying blankets or plastic with straw in sufficient depth to maintain the temperatures set forth in Column 2, Table A of this section. Such protection shall be continued for a minimum period of (3) days unless directed otherwise by the Engineer. Temperatures will be monitored and measured via High/Low**,** or infrared thermometers throughout (3) day duration by Public Works staff.

231.10 **Placing and Finishing Concrete**

231.10.1. Concrete shall be placed in successive batches over the entire width between side forms. Care shall be taken in discharging concrete to avoid segregation. Concrete shall be thoroughly vibrated along the forms or sides and along expansion longitudinal joints by means of a small approved hand-type

mechanical vibrator. Care shall be taken that the vibrator does not penetrate

the sub-grade or dislodge or remove the joints.

231.10.2. The concrete shall be brought to the proper section by means of a mechanical finishing machine, a vibrating screen or by an approved type of strike-off board. If a strike-off board is used, it shall be constructed of a material that will not warp, shrink or sag and shall weigh not less than ten (10) pounds per lineal foot. The strike-off board shall be used as a tamping template, if other equipment is not provided for this purpose, with an up and down motion while being propelled forward manually. Any of the above devices, if used, shall be adjusted to the exact crown of the pavement.

The surface shall be checked with a straight edge not less than ten (10) feet in length, mounted on long handles and any low spots filled in and high spots removed. All disturbed places shall be refloated. The pavement shall not vary more than one-fourth (1/4) inch from a ten (10) foot straight edge laid parallel to the center line.

The final finishing operation may be accomplished by any one of the following methods. If the Contractor has elected to use either the mechanical brooming or the burlap drag method and the results are not satisfactory, the Engineer may require that the hand brooming method be used.

231.10.2.1 **Hand Brooming** - After surface irregularities have been removed, the surface of the concrete shall be given a broom finish. Approved steel or fiber brooms of not less than eighteen (18) inches wide, shall be drawn across the surface from the center line towards each side, with the broom held perpendicular to the surface, one stroke of the broom per width of broom, slightly overlapping adjacent strokes. The corrugations resulting from the broom operation shall be uniform in appearance and not more than one-sixteenth (1/16) inch in depth. Brooming shall be completed before the concrete is in such condition that it will be torn or unduly roughened and before the concrete has obtained its initial set.

231.10.2.2 **Mechanical Brooming** - A machine capable of producing a finished surface similar to that required for hand brooming may be used for the final finishing of the pavement surface.

231.10.2.3 **Burlap Drag** - A seamless strip of damp burlap or cotton fabric which will produce a uniform surface of gritty texture by dragging the fabric along the full width of pavement may be used for the final finishing of the pavement surface. The fabric drag shall be at least two (2) feet longer that the width of the pavement being finished and shall be dragged in a

longitudinal direction. The fabric shall be cleaned or replaced as often as necessary to obtain the required surface texture.

The Contractor will be held responsible for the correct alignment, grade and contour specified. Any spots higher than one-fourth (1/4) inch in ten (10) feet, for concrete pavement shall be ground to the required surface by the Contractor at his own expense.

All exposed edges of the concrete at joints, other than sawed joints, and back of curb shall be finished with an edging tool of one-fourth (1/4) inch radius.

231.11 **Integral Curb -** Integral curb shall be constructed at each side of the pavement conforming to the dimensions and design as shown on plans and shall be constructed of the same concrete as the pavement.

The curb shall be placed immediately after all pavement finishing operations but before the concrete has taken its initial set. The time elapsing between placing the pavement and placing the curb shall not be more than forty-five (45) minutes. A thorough bond shall be obtained between the pavement and curb; if necessary the pavement shall be roughened by a trowel or wire brush. After the concrete has been placed in the curb form, it shall be spudded or tamped to insure sufficient density to prevent honeycomb. When the concrete has sufficiently set, the face forms shall be removed and the curb finished to proper alignment, grade and cross section by troweling and floating with properly shaped tools. No plastering with grout will be permitted. The final finish shall be made by brushing transversely from bottom to top.

All transverse joints in the pavement shall be matched evenly and through the curb and shall conform to the shape of the curb.

231.12 **Curing -** After the concrete has been finally finished and the water has left the surface, the exposed surface shall be sprayed with a transparent membrane solution (Hunts Process Curing Compound, Cure Crete or approved equal). The curing material shall be applied in strict accordance with the manufacturer's recommendations and as directed by the Engineer. If rain falls on the newly coated pavement before the film has dried sufficiently to resist damage, or if the film is damaged in any other way, the Contractor will be required to apply additional curing material to the affected portions. Application shall be by a pressure spray at a uniform rate not to exceed two hundred (200) square feet of surface per gallon of spray. If hair checking develops before the membrane can be applied, the concrete shall be initially cured with wet burlap before the membrane is applied. After the side forms are removed the sides shall be sprayed with the curing compound.

Other methods of curing may be used if pre-approved by the Public Works Department. Request for use of an alternate method must be received by the Public Works Department

in writing no later than five (5) working days before plan of use and must be supported with the specifications of such method.

231.13 **Backfilling Slab Edges and Curbs -** Slab edges and the back side of integral curbs shall be banked with earth as soon as the forms are removed and the required finishing operations completed. Before the pavement is opened to traffic or the work accepted, the area outside the slab edge or back of the curb shall be backfilled with selected earth approved by the Engineer, thoroughly compacted in layers not exceeding six (6) inches in depth and neatly graded off flush with the slab or top of the curb or as shown on the plans.

231.14 **Opening to Traffic -** The concrete pavement may not be opened to traffic until seven (7) full days have passed since the concrete was placed unless otherwise directed by the Engineer.

231.15 **Protection from Traffic -** As soon as the placing of concrete begins, the Contractor shall provide means for completely protecting the pavement from any and all damage or marring of the surface. Barricades, lights and signals shall be provided as needed. At all places where it is necessary to maintain public or private crossing over the pavement the Contractor shall at his own expense provide and maintain bridges or other devices that will prevent the damage or marring of the concrete.

231.16 **Inspection and Testing -** Inspection and testing shall be performed in accordance with **Section 230.6**. Concrete for pavement shall have a slump of two (2) to four (4) inches when using ready-mix concrete and one (1) to three (3) inches when using a concrete paving machine. Concrete used for paving shall have a minimum average compressive strength of 4000 psi at twenty-eight (28) days and a minimum average flexural strength of 550 psi.

SECTION 232 CONCRETE CURB AND GUTTER

232.1 **Description** - Concrete curb and gutter shall consist of portland cement concrete, placed with or without reinforcement on a prepared sub-grade. The type and dimensions shall be as shown on the construction plans.

232.2. **Materials** - Concrete used in the construction of curb and gutter shall be **Class "A**" concrete, unless otherwise specified; and all materials, proportioning, air-entraining, mixing, and transporting for portland cement concrete shall be in accordance with **Section 230**, Portland Cement Concrete. Reinforcing steel shall conform to **Section 238**, Reinforcement for Portland Cement Concrete.

232.3 **Sub-grade** - The sub-grade shall be graded, compacted and rolled to insure maximum density to the exact cross section and elevations shown on the plans. The sub-grade shall be moistened in advance of depositing concrete, but shall not be muddy or excessively wet.

232.4 **Forms** - The forms for this work shall be metal or wood of full depth of the concrete, straight, free from warp and of sufficient rigidity to prevent distortion due to the pressure of the concrete and other loads incidental to the construction operations. The forms shall be substantial and unyielding and shall be so designed that the finished concrete will conform to the proper dimensions and contours. Forms shall be set and maintained true to the line designated until the concrete is sufficiently hardened. Forms shall be thoroughly cleaned, greased or soaped before concrete is placed. Forms shall be joined neatly and tightly for a distance of at least one hundred (100) feet in advance of the point of placing concrete.

232.5 **Mixing, Handling and Placing, Finishing and Curing Concrete** - The mixing, handling and placing, finishing and curing of concrete for curb and gutter shall be in accordance with the appropriate requirements as designated under **Section 231**, Portland Cement Concrete Pavement, unless otherwise specifically designated.

Concrete curb and gutter shall be constructed in sections having a uniform length of ten (10) feet maximum. The length of a single section may be reduced to a minimum of four (4) feet where necessary for closure. Expansion joints shall be provided at intervals of ninety (90) feet. All joints in concrete curb and gutter shall receive joint filler in accordance with **Section 231.6.8** of these specifications. The face and top of the curb and gutter shall be floated smooth and the edges shall be rounded as shown in typical section.

232.6 **Backfill.** - After the concrete has set sufficiently, as determined by the Engineer, the spaces back of curbs shall be back-filled to the required elevation with suitable material which shall be compacted in layers of not more than six (6) inches until firm and solid.

232.7 **Inspection and Tests** - Inspection and testing shall be performed in accordance with the requirements of **Section 230.6**, Concrete for Concrete Curb and Gutter, shall have a slump of two (2) to four (4) inches.

SECTION 234 CONCRETE SIDEWALKS

234.1 **Description** - Concrete sidewalks shall be constructed to the line, grade and dimensions shown on the plans or as established by the Engineer. Unless otherwise specifically designated, concrete sidewalks shall have a width of four (4) feet and a depth of four (4) inches, except that at driveways or other points designated on the plans, the depth shall be increased to six (6) inches.

234.2 **Concrete** - Concrete used in the construction of sidewalks shall be **Class "A"** concrete as specified in **Section 230**, Portland Cement Concrete, with the additional requirement that the amount of chert in crushed limestone aggregate shall not exceed two percent (2%) by weight. All materials, proportioning, air-entraining, mixing, and transporting for concrete shall be in accordance with **Section 230**.

234.3 **Construction**

234.3.1 **Sub-grade** - Concrete sidewalks shall be constructed on a prepared smooth sub-grade of uniform density. Large boulders and ledge rock found in the sub-grade shall be removed to a minimum depth of six (6) inches below the finished sub-grade elevation and the space shall be backfilled with suitable material which shall be thoroughly compacted by rolling or tamping. The Contractor shall furnish a template and shall thoroughly check the sub-grade prior to depositing concrete.

234.3.2 **Forms** - The forms shall be of either metal or wood and shall be straight, free from warp, of sufficient strength to resist springing during construction, and of a height equal to the full depth of the sidewalk to be constructed. Wood forms shall have a minimum thickness of two (2) inches. Metal forms shall be of a type approved by the Engineer. Flexible or curved forms of proper radius shall be furnished on curves. The forms shall be thoroughly cleaned, well oiled, securely staked, braced, and held to the required line and grade before any concrete is deposited.

234.4 **Depositing Concrete** - The concrete shall be deposited between the forms on moistened sub-grade and shall be struck off and compacted to the required thickness. Concrete may be compacted by internal vibrating equipment, spading, rodding or tamping or as directed by the Engineer.

234.5 **Joints** - Dummy joints, spaced approximately at five (5) feet intervals, shall be provided for the full width (and length for wider sidewalks) to a depth of one (1) to two (2) inches. The joint may be made by a suitable tooling device or by tamping tapered metal or wooden strips into the plastic concrete, which strips shall be removed after the concrete has partially set. As an alternate method, the dummy joint may be made by sawing the concrete after initial set and before shrinkage cracks occur.

Premoulded expansion joint material, one-half (1/2) inch thick, shall be installed in the sidewalk for its full depth wherever it meets another sidewalk, driveway, building, curb, lighting standard, fireplug, or other rigid object. Expansion joints shall be placed on all four (4) sides of the square formed by the intersection of two (2) sidewalks. When the sidewalk fills the space between the curb and a building or wall, an expansion joint shall be placed between the sidewalk and the curb and between the sidewalk and the building or wall.

234.6 **Finishing** - After the concrete has been brought true to line and grade it shall be finished to a medium rough finish by use of a stiff broom or other approved method to produce an even, gritty texture. All edges shall be rounded with an edging tool to one-fourth (1/4) inch radius.

234.7 **Curing** - Immediately after finishing, the sidewalk shall be cured in the same manner as required under **Section 231.12.**

234.8 **Cold Weather Concreting** - Temperature of the concrete and cold weather construction requirements shall be the same as specified in **Sections 231.8** and **231.9**.

234.9 **Backfilling** - After the concrete has sufficiently set, the form shall be removed and the space on each side of the walk shall be backfilled. The earth shall be compacted and graded in a manner satisfactory to the Engineer.

234.10 **Inspection and tests** - Inspection and testing if required, shall be performed in accordance with the requirements of **Section 230.6**. Concrete for concrete sidewalks shall have a slump of two (2) to four (4) inches.

SECTION 236 PATCHING PORTLAND CEMENT CONCRETE PAVEMENT

236.1 **Description** - Where noted on the plans, or as directed by the Engineer, the Contractor will be required to patch the existing portland cement pavement.

236.2 **Construction** - After all pavement in the patch area has been removed as required, the sub-grade shall be excavated to provide an under-cut approximately two (2) inches wide and two (2) inches deep. Should the sub-grade be unstable, such undesirable material as may be encountered shall be excavated to a minimum depth of twelve (12) inches below the top of the finished concrete patch. The sub-grade shall then be constructed to proper elevation by filling with approved aggregate material and compacted until all sub-grade weakness has been corrected.

The area shall then be paved with **Class "AA"** portland cement concrete as specified in **Section 230**, Portland Cement Concrete. All appropriate provisions of **Sections 230** and **231** shall apply, except for the following items:

236.2.1 Hand finishing will be permitted.

236.2.2 Transparent membrane curing solution will not be permitted if the pavement is to be resurfaced.

Unless otherwise noted on the plans, material excavated from sub-grade shall be disposed of away from the project at locations, which are the sole responsibility of the Contractor.

SECTION 237 CONCRETE DRIVEWAY PAVEMENT

237.1 **Description** - Where called for on the plans, or as directed by the Engineer, non-reinforced concrete driveway pavement shall be constructed to the line, grade and dimensions shown on plans.

237.2 Concrete used in the construction of driveway pavement shall be **Class "A"** concrete, and all materials, proportioning, air entrainment, mixing, and transporting for the concrete shall be in accordance with **Section 230**, Portland Cement Concrete.

The mixing, handling and placing, finishing and curing of concrete for driveways shall be in accordance with the appropriate requirements of **Section 231**, Portland Cement Concrete Pavement.

SECTION 238 REINFORCEMENT FOR PORTLAND CEMENT CONCRETE

238.1 **Description** - This item shall include billet-steel bars, rail-steel bars, axle-steel bars, cold-drawn steel wire, fabricated steel bars or rod mats and welded steel wire fabric for concrete reinforcement. Also minimum requirements for the deformations of deformed steel bars for concrete reinforcement.

238.2 **Materials** - All materials shall conform to the requirements of the American Society for Testing Materials as hereinafter designated. Only one grade of steel will be allowed on any one Contract, unless otherwise noted on the plans or in the special provisions.

238.3 **Protection of Material** - Steel reinforcement shall be protected at all times from injury. When placed in the work, it shall be free from dirt, detrimental scale, paint, oil or other foreign substance. However, when steel has on its surface detrimental rust, loose scale and dust which is easily removable, it may be cleaned by a satisfactory method, if approved by the Engineer.

238.4 **Fabrication** - Bent bar reinforcement shall be cold bent to the shapes shown on the plans, and unless otherwise provided on the plans or by authorization, bends shall be made in accordance with the following requirements:

Bar reinforcement shall be shipped in standard bundles, tagged and marked in accordance with the *Code of Standard Practice of the Concrete Reinforcement Steel Institute.*

238.5 **Bar Reinforcement** - Bar reinforcement shall conform to the requirements of the ASTM Specifications Designation A 15-58T for billet-steel bars or ASTM Designation A 16-59T for rail steel bars, or the latest revision thereof.

All bars shall be of the deformed type conforming to ASTM Designation A 305-56T or the latest revision thereof, unless otherwise specified.

The use of twisted bars is not permitted. Steel for all bars shall be made by the open hearth process, unless otherwise called for in the special provisions of the plans.

238.6 **Wire and Wire Mesh** - Wire shall conform to ASTM Designation A 82-58T for cold-drawn steel wire for concrete reinforcement, or the latest revision thereof.

Wire mesh, when used as reinforcement in concrete, shall conform to ASTM Designation A 185-58T Welded Steel Wire Fabric, or the latest revision thereof. The type of mesh shall be approved by the Engineer.

238.7 **Bar Mat Reinforcement** - Bar mat reinforcement for concrete shall conform to ASTM Designation A 184-37 the specification for fabricated steel bar or rod mats, or the latest revision thereof.

238.8 **Placing and Fastening** - All steel reinforcement shall be accurately placed in the position shown on the plans and firmly held during the placing and setting of concrete. When placed in the work, it shall be free from dirt, detrimental rust, loose scale, paint, oil or other foreign material. Bars shall be tied at all intersections except where spacing is less than one (1) foot in each direction when alternate intersections shall be tied.

Distances from the forms shall be maintained by means of stays, blocks, ties, hangers, or other approved supports. Blocks for holding reinforcement from contact with the forms shall be precast mortar blocks of approved shape in dimensions or approved metal chairs. Metal chairs which are in contact with the exterior surface of the concrete shall be galvanized. Layers of bars shall be separated by precast mortar blocks or by other equally suitable devices. The use of pebbles, pieces of broken stone or brick, metal pipe and wooden blocks shall not be permitted. The minimum spacing center to center of parallel bars shall be two and a half (2 1/2) times the diameter of round or three (3) times the side dimension of square bars, but in no case shall the clear distance between the bars be less than one and a half (1 1/2) times the maximum size of the coarse aggregate. Reinforcement in any number shall be placed and then inspected and approved by the Engineer before the placing of concrete begins. Concrete placed in violation of this provision may be rejected and removal required.

If fabric reinforcement is shipped in rolls, it shall be straightened into flat sheets before being placed.

238.9 **Splicing** - All reinforcement shall be furnished in the full lengths indicated on the plans. Splicing of bars, except where shown on the plans, will not be permitted without the written approval of the Engineer. Splices shall be staggered as far as possible.

Unless otherwise shown on the plans, bars in the bottom of beams and girders, and in wall, columns and haunches shall be lapped twenty (20) diameters and bars near the top of beams and girders having more than twelve (12) inches of concrete under the bars shall be lapped thirty-five (35) diameters, to make the splice. In lapped splices, the bars shall be placed in contact and wired together in such a manner as to maintain a clearance of not less than the minimum clear distance to other bars and the minimum distance to the surface of the concrete, as specified above under Placing and Fastening. Welding of reinforcement steel shall be done only if detailed on the plans or if authorized by the Engineer in writing. Welding shall conform to the current specification for Welded Highway and Railway Bridges of the American Welding Society.

238.10 **Lapping** - Sheets of mesh or bar mat reinforcement shall overlap each other sufficiently to maintain a uniform strength and shall be securely fastened at the ends and edges. The edge lap shall not be less than one (1) mesh in width.

238.11 **Substitutions** - Substitution of different size bars will be permitted only with specific authorization by the Engineer. If steel is substituted, it shall have an area equivalent to the design area, or larger.

The weight of plain bars or bar mat, or of deformed bars, which do not comply with ASTM A 305-56T will be computed from the theoretical weight of plain round or square bars of the same nominal size as shown in the following table:										
Size	1/4"	3/8"	1/2"	5/8"	3/4"	7/8"	1"	1-1/8"	1-1/4"	1-1/2"
Weight in Round Pounds	0.167	0.376	0.668	1.043	1.502	2.044	2.670			
Per Square Foot			0.850				3.400	4.303	5.313	7.650

The weight of bars which comply with ASTM A 305-56T will be calculated as follows:									
Bar	No. 3	No. 4	No. 5	No. 6	No. 7	No. 8	No. 9	No. 10	No. 11
Weight Pounds Per Lineal Foot	.376	0.668	1.043	1.502	2.044	2.670	3.400	4.303	5.313

The weight of reinforcement used in railings when they are paid for on a lineal foot basis, shall not be included. The weight of reinforcement in precast piles and other items where the reinforcement is included in the Contract price for the item shall not be included.

When laps are made for splices, other than those shown on the plans, for the convenience of the Contractor, the extra steel shall not be included.

SECTION 250 CONCRETE STRUCTURES

250.1 **Description** - Concrete structures shall include drainage structures such as reinforced concrete boxes, culverts, junction boxes, curb inlets, manholes, catch basis, paved channels, etc., also retaining walls and any special concrete structures.

250.2 **Materials** - Portland cement shall conform to the requirements of **Section 230.2.1** of these specifications. Concrete air entraining admixtures shall conform to the requirements of **Section 230.2.2** of these specifications. Fine aggregate shall conform to the requirements of **Section 230.2.3** of these specifications. Coarse aggregate shall conform to the quality requirements of **Section 230.2.4** of these specifications and gradation conforming to the following table for the various uses listed below:

Table Gradations of Coarse Aggregates			
Maximum Size Sieve	1-1/2"	1"	3/4"
	Percent of Passing		
Size	**Column I**	**Column II**	**Column III**
2"	100		
1-1/2"	95-100	100	
1"		95-100	100
3/4"	35-70		90-100
1/2"		25-60	
3/8"	10-30		20-55
No. 4	0-5	0-10	0-10
No. 8		0-5	0-5

250.3 **Uses**

250.3.1 All general structural construction, including walls, slabs, beams, etc., which are either four (4) inches or more thick in the smallest dimension and not reinforced, or five (5) inches or more thick in the smallest dimension and reinforced with at least two (2) inch space between steel and forms: Column II.

250.3.2 Exceptionally heavy slabs, structural members and footings may meet (at the option of the concrete producer and with the approval of the Engineer): Column I.

250.3.3 Very thin or heavily reinforced sections not having the minimum dimensions or steel clearances of paragraph (a) but not floor toppings thinner than two and a half (2-1/2) inches: Column III.

250.4 **Uniformity**

The following limits of variation in gradation of coarse aggregate at the time of batching into the mixer shall be met:

250.4.1 The fineness modulus for coarse aggregate to be used in any given mix design shall not vary more than plus or minus 0.20 from the fineness modulus of the gradation on which the mix was designed. For the purposes of this specification, the fineness modulus shall be the sum of the percentages by weight retained on the following standard sieve series: 1 1/2", 3/4", 3/8", No. 4, No. 8, No. 16, No. 30, No. 50 and No. 100. Aggregates from more than one supplier must be used separately with different mix designs unless they are sufficiently similar to fall within the limits of this section.

250.4.2 The variation in percentage between any two successive sieves shall be limited to two percent (2%) or one-tenth (1/10) of the percentage of the same size material contained in the gradation on which the mix was designed, whichever is larger.

Water shall conform to the requirements of **Section 230.2.5** of these specifications.

250.5 **Sampling and Testing** - Sampling and testing of concrete and materials, if required, shall be made under the direction of the Engineer, who shall have access to all places where concrete materials are stored, proportioned, mixed or placed. A recognized testing laboratory, selected by the Contractor and approved by the Engineer, shall be employed by the Contractor to test cement and aggregates proposed for inclusion in the work, to design the concrete mix, and to test all concrete cylinders. The Contractor shall furnish the laboratory with adequate samples of aggregates and cement to permit required testing.

The tests listed below shall be performed by the laboratory with certified test results submitted to the Engineer for his approval. Materials to be tested and testing shall be according to the following:

250.5.1 Cement shall be sampled and tested according to ASTM C 150 and C 175.

250.5.2 Coarse and fine aggregates shall be sampled and tested as follows:

Sampling	ASTM D 75
Gradation	ASTM C 136 and C 117
Impurities	ASTM C 40 (Sand), C 123, C 142 and AASHTO-T10
Soundness	ASTM C 88, if required

250.5.3 The determination of slump of concrete shall conform to ASTM C 143.

250.5.4 Concrete test cylinders shall be cast and tested in accordance with ASTM C 31 and C 39. The Contractor shall make three (3) job cylinders for each day's pour, or as directed by the Engineer. All cylinders shall be cured under the same

conditions as job concrete. Job cylinders shall be identified at the time cast as to which pour is represented.

The Contractor shall ship or deliver two (2) cylinders to the laboratory on the fourth day, one of which is to be tested on the seventh day, the other to be laboratory cured and tested on the twenty-eighth day. One (1) cylinder shall be shipped on the twenty-fourth day and tested on the twenty-eighth day.

The Contractor shall furnish the City three (3) copies of test reports for concrete test cylinders. Unsatisfactory tests of job cylinders shall make the concrete concerned subject to rejection, with consequent removal and replacement by the Contractor at his expense.

250.6 **Classes of Concrete** - Concrete shall be divided into various grades to be used in the respective places shown on the plans, called for in the specifications, or ordered by the Engineer. The classes of concrete mixtures are referred to as Class C, Class D, Class E and Class F.

250.6.1 **Class C** – Class C concrete is intended principally for precast concrete slabs and shall conform to Mix Number A600-3/4-2, or A600-1-2.

250.6.2 **Class D** - Class D concrete is intended principally for reinforced concrete structures designed for high strength and water tightness, and shall be used for columns, walls, beams, slabs, and in general, wherever form-work, other than simple forms, is required and shall conform to Mix Number A550-3/4-4, or A550-1-4.

250.6.3 **Class E** - Class E concrete is intended principally for reinforced concrete structures, designed for high strength and water tightness and shall be used for bottoms of structures and, in general, where concrete is deposited directly on the bottom or slopes of excavations and where simple forms only are required and shall conform to Mix Number A550-3/4-2 or A500-1-2.

250.6.4 **Class F** - Class F concrete is intended principally for low strength concrete, plain or reinforced, used for soil stabilization, pipe cradle, filling, and other similar purposes. For large volumes, as between the underside of structures and the surface of rock, boulders, or fragments or rock excavated during construction may be embedded in the concrete to provide added bulk. Care should be taken in placing boulders or rock fragments, so that there will be no voids in the concrete. This concrete shall conform to Mix Number A450-4-4 or A450-1-4.

250.6.5 **Mix Design** - Mix numbers in paragraphs above refer to the mix numbers in the Mix Design Tables shown on the following pages.

250.7 **Cold Weather Requirements -** No concrete shall be placed on iced or frozen subgrade or when temperature is below thirty-two degrees Fahrenheit (32° F.). Concreting shall not be continued when the air temperature is below forty degrees Fahrenheit (40°F.) unless the following conditions are attained:

250.7.1 Mixing water shall be heated to a maximum of one hundred fifty degrees Fahrenheit (150°F.).

250.7.2 Aggregates shall be heated until free of all ice and frost.

250.7.3 The concrete temperature after mixing shall be between fifty degrees Fahrenheit (50°F.) and seventy degrees Fahrenheit (70°F.) if the air temperature is twenty degrees Fahrenheit (20°F.) to forty-five degrees Fahrenheit (45°F.).

250.7.4 After the concrete is placed, it shall be covered, protected, and heated so as to maintain a maximum of seventy degrees Fahrenheit (70°F.) air temperature for the first twenty-four (24) hours and fifty degrees Fahrenheit (50°F.) air temperature for the next six (6) days.

250.7.5 Moist conditions shall be maintained during the heating period.

250.7.6 All covering, heating equipment, etc., shall be on hand and approved by the Engineer before any concrete is placed.

250.7.7 Admixtures, such as calcium chloride, shall be used only with the approval of the Engineer.

250.8 **Hot Weather Requirements**. No exposed concrete is to be placed in air temperatures above one hundred degrees Fahrenheit (100°F.). Cover, protect and cool work as required to maintain the temperature of the concrete below one hundred degrees Fahrenheit (100°F.). The concrete temperature, after mixing shall not be greater than eighty-five degrees Fahrenheit (85°F.). Spray and/or shade aggregate piles and cool mixing water is required.

MIX DESIGN TABLES

Mix Number	Max. Stone Size	Max. Total Water #'s	W/C Weight Ratio	Gallons Per Sack	28-Day Design Strength psi	28-Day Av. Test Strength psi
450 POUNDS OF CEMENT PER CUBIC YARD (4.78 SACKS) - AIR-ENTRAINED CONCRETE						
4" Slump						
A-450-1 1/2-4	1 1/2"	260	.578	6.52	2750	3150
A450-1-4	1"	260	.578	6.52	2750	3150
A450-3/4-4	3/4"	270	.600	6.77	2600	2950
A450-1/2-4	1/2"	290	.644	7.27	2300	2650
500 POUNDS OF CEMENT PER CUBIC YARD (5.32 SACKS) - AIR-ENTRAINED CONCRETE						
2" Slump						
A500-1 1/2-2	1 1/2"	235	.470	5.30	3550	4100
A500-1-2	1"	235	.470	5.30	3550	4100
A500-3/4-2	3/4"	245	.490	5.53	3400	3900
A500-1/2-2	1/2"	265	.530	5.98	3100	3550
550 POUNDS OF CEMENT PER CUBIC YARD (5.85 SACKS) - AIR-ENTRAINED CONCRETE						
2" Slump						
A550-1 1/2-2	1 1/2"	235	.427	4.82	3950	4500
A550-1-2	1"	235	.427	4.82	3950	4500
A550-3/4-2	3/4"	245	.445	5.02	3800	4350
A550-1/2-2	1/2"	265	.482	5.44	3450	4000
4" Slump						
A550-1 1/2-4	1 1/2"	260	.473	5.34	3550	4050
A550-1-4	1"	260	.473	5.34	3550	4050
A550-3/4-4	3/4"	270	.491	5.54	3400	3900
A550-1/2-4	1/2"	290	.527	5.95	3100	3600

MIX DESIGN TABLES (continued)

600 POUNDS OF CEMENT PER CUBIC YARD (6.38 SACKS) - AIR-ENTRAINED CONCRETE						
Mix Number	Max. Stone Size	Max. Total Water #'s	W/C Weight Ratio	Gallons Per Sack	28-Day Design Strength psi	28-Day Av. Test Strength psi
2" Slump						
A600-1 1/2-2	1 1/2"	235	.392	4.42	4250	4900
A600-1-2	1"	235	.392	4.42	4250	4900
A600-3/4-2	3/4"	245	.408	4.60	4100	4700
A550-1/2-2	1/2"	265	.442	4.99	3800	4350

Required Air Content in the Air Entrained Concrete at the Time of Discharge from the Mixer at the Job Site

Maximum Aggregate Size	**Percent Limits of Entrained Air**
1 1/2"	6% plus or minus 1 1/2%
1"	6% plus or minus 1 1/2%
3/4"	6% plus or minus 1 1/2%
1/2"	7% plus or minus 1 1/2%

Slump shown indicates the slump to be expected at time of discharge from the mixer at the job site plus or minus one (1) inch, i.e. a four (4) inch slump indicates a range between three (3) and five (5).

The above strength tables are based on Type 1 portland cement meeting the requirements of ASTM Standard Specifications C 150. For Type 2 portland cement, multiply the 28-day strength values by the factor 0.90. For ninety (90)-day strength values of Type 2 portland cement, multiply the 28-day design or average strength values by the factor 1.00.

The "28-Day Average Test Strength" values are 115% of the "28-Day Design Strength" values.

NOTES PERTAINING TO THE MIX DESIGN TABLES

1. **The "28-Day Average Test Strength"** - The average strength of all 28-day test cylinders for the designated mix shall not fall below the figure shown in the table.

2. **The "28-Day Design Strength"** - Each 28-day strength test shall consist of the average strength of a set of at least two (2) laboratory cured (ASTM C 192) cylinders broken at 28 days. In any cylinder test set if any one (1) cylinder has a test strength of less than seventy-five percent (75%) of the higher strength cylinder in the set (or in the case of more than two (2) cylinders per set less than seventy-five percent (75%) of the average of the other cylinders in the set) then this low strength cylinder shall be rejected in determining the average strength of the set. The average strength of any five (5) consecutive sets shall not fall below the strengths in this column. No set of tests shall have an average strength of less than eighty percent (80%) of the design strength indicated by the table. Should any test fall below eighty percent (80%) of the design strength it may be disregarded if the Architect-Engineer's investigation shows that the low strength is the result of improper testing procedures.

3. **Proportions** - Sand Factor. In each mix design the percentage of fine aggregate in the total aggregate shall be the optimum ratio for good workability. The supplier shall adjust proportions of fine and coarse aggregates to obtain optimum workability provided the specified water-cement ratio is maintained.

4. **Water-Cement Ratio** - In each mix design the water content has been stated realistically for the size of aggregate and slump specified. In the event more water is used in any mix design than stated in the strength tables, additional cement shall be added to maintain the stated water-cement ratio.

5. **Total Pounds of Water –** The total pounds of water per cubic yard of concrete include allowance for all surface moisture on the aggregates.

6. **Verification of Designs** - If the project specification so requires, samples of materials proposed for use in concrete shall be submitted to a designated testing laboratory employed by the Owner to demonstrate through strength tests from trial batches, that when proportioned in accordance with the *Mix Design Tables*, the materials will, in fact, produce concrete of the class and strength required. Verification tests to be deemed satisfactory shall be at least equal to the "28-Day Average Test Strength" for the mix specified. If verification tests fall below this limit, either the material samples shall be changed and resubmitted or a revised design shall be employed.

7. **Producer's Duty** - The frequent measurement of moisture content in aggregates and the correction of quantities of ingredient for variations in moisture content and quality control of ingredients delivered to the plant, together with mix adjustments to compensate for observed variations of gradations, shall be the responsibility of the concrete producer.

8. **Use of Concrete Admixtures** – The use of concrete admixtures which involves an adjustment of the cement factor, as given in the Mix Design Tables for "28-Day Design Strength" as specified, shall require approval by the Engineer.

Reinforcing steel shall conform to the requirements of **Section 238** of these specifications

250.9 **Construction**

250.9.1 **Forms for Concrete Structures** - Forms shall conform to the shape, lines and dimensions of members called for on plans, and shall be sufficiently rigid and tight to prevent leakage of mortar. They shall be properly braced or tied together to maintain their position and shape when concrete is tamped or vibrated. Forms may be constructed of:

250.9.1.1 Lumber, No. 2 or better, with a minimum thickness of one (1) inch, and containing no holes or loose knots. Ship lap may be used where so specified on the plans. Form liners shall be one-fourth (1/4) inch plywood or approved fiber board on one (1) inch solid backing.

250.9.1.2 Plywood forming material may be used if three-fourths (3/4) inch plywood forms have studs on sixteen (16) inch centers or five-eighths (5/8) inch plywood forms have studs on twelve (12) inch centers.

250.9.1.3 Steel forms may be used if of a reputable manufacturer and in first class order, free from dents, etc.

All exposed corners and edges shall be provided with three-fourths (3/4) inch chamfer. Cleanouts shall be provided as required to remove sawdust and debris. All contact surfaces shall be oiled sparingly.

Wall form ties shall be steel of the breakback type with one and a half (1 1/2) inch breakback and with a cone the full depth and not larger than one (1) inch diameter. For other forms use pencil rods and cut back inside the concrete.

The Engineer's approval of forms shall be required before any concrete is placed.

250.9.2 **Placing Reinforcing Steel** - All reinforcing shall be free from scale, rust or coatings which will reduce the bond on the concrete. Bars shall be accurately bent and placed as indicated on the shop drawings and securely supported and tied with #16 annealed iron tie wire at all intersections to prevent movement during the placement of concrete. Where shown on the plans, certain bar intersections shall be welded. The Contractor may, at his option, weld all intersections and splices.

Lap and tie or spot weld the reinforcing steel together at splices. Splices shall be staggered as shown on the plans.

Reinforcing steel shall be placed for minimum concrete coverage as follows:

250.9.2.1 Three (3) inch for bottom steel in footings and slabs poured on sub-grade

250.9.2.2 Two (2) inch from surface to be exposed to water or earth backfill

250.9.2.3 One and a half (1 1/2) inch for walls, beams and columns above ground

250.9.2.4 One (1) inch from top of slabs

Consult the plans for any exception to the above.

The Engineer's approval is required at the completion of placing reinforcing steel prior to the placing of any concrete.

250.9.3 **Placing Concrete** - Prior to placing concrete, all water shall be removed from excavations; no concrete shall be placed under water; sub-grade for slabs less than twelve (12) inches thick shall be dampened. All debris shall be removed from the forms.

Wall concrete shall be placed continuously in horizontal layers of eighteen (18) inch lifts. Placing locations shall not be more than ten (10) feet apart. Tremies are required when the concrete has to be dropped farther than five (5) feet. Surface water shall be drained off and mixing water shall be reduced as required in the top layers of deep pours.

The working face of the concrete shall be kept plastic and "alive." High frequency vibrators shall be used at all times, supplementing as required with hand tamping, slicing, etc. Avoid vibrator contact against finished face forms of reinforcing steel adjacent to partially set concrete. Avoid over-vibrating.

Concrete shall be protected against rain or immersion under water for at least twelve (12) hours.

250.9.4 **Construction Joints** - Construction joints shall be made only at points shown or noted on the Plans, except when otherwise approved by the Engineer. Vertical construction joints in the reinforced concrete boxes shall be spaced at a maximum of thirty (30) feet on center. Reinforcing shall be carried continuously through all construction joints. Construction joints shall be formed straight and true with finished edges.

Where a joint is to be made, the surface of the concrete shall be thoroughly cleaned and all laitance removed. The joint shall be thoroughly wetted and slushed with a coat of cement grout immediately before placing of new concrete. Grout shall be mixed using a ratio of one (1) to two and a half (2 1/2) parts of cement to sand.

250.9.5 **Removing Forms** - Remove forms only after concrete has safe and sufficient strength and only with approval of the Engineer.

250.9.6 **Concrete Finish** - Immediately after the removal of forms, the Engineer will examine the exposed concrete. Any concrete not conforming to the lines and grades shown on the Plans, or which shows poor joints, voids, stone pockets, honeycomb and otherwise defective areas shall be considered as not conforming with these specifications, and shall be replaced by the Contractor at his expense, except in cases where the Engineer approves patching the defective parts of the structures. Permission to patch any defective parts of the structure shall not waive the Engineer's right to require the replacement of defective parts if the patching does not, in his opinion, satisfactorily restore the quality and appearance of these defective parts.

Specific concrete finishes required will be as follows:

250.9.6.1 Top of drainage structure to slab: sand float.

250.9.6.2 Inside of drainage structure top slab and walls: form-finish with rough spots as well as honeycombing removed; ties to be broken and tie holes grouted.

250.9.6.3 Drainage structure floor slab: sand float.

250.9.6.4 Outside of structure wall: ties to be broken and tie holes grouted with honeycombing removed.

250.9.6.5 Exposed structural concrete surfaces: hand rubbed to a smooth finish with a carborundum brick until form prints are removed.

250.9.7 **Curing of Concrete** - Curing of concrete shall be maintained continuously for seven (7) days after placing the concrete. Concrete temperature is to be maintained between fifty degrees Fahrenheit (50°F.) and one hundred degrees Fahrenheit (100°F.). Moisture is to be retained in the concrete by the following means:

250.9.7.1 **Walls and Structures**

250.9.7.1.1 Cover with tarps and leave form on seven (7) days, or

250.9.7.1.2 Cover with cotton batts continuously wet seven (7) days, or

250.9.7.1.3 Spray approved membrane, one (1) gallon to two hundred (200) square feet for unfinished surfaces only.

250.9.7.2 **Slabs**

Pond, or wet cotton batts, or two (2) inch wet sand blanket, or curing paper with sealed edges. Apply immediately after finishing.

250.9.8 **Welding -** All welding shall be shielded arc, fusion welding, made in conformity with the requirements of the "Specification for the Design, Fabrication and Erection of Structural Steel for Buildings" of the A.I..S.C. and the "Code for Arc and Gas Welding in Building Construction" of the American Welding Society, as amended to date. Methods employed and technique shall be subject to the approval of the Engineer.

250.9.9 **Maintenance of Storm Sewers During Construction -** All storm sewers, drain lines, and appurtenances installed under this Contract must be kept reasonably clean during construction. The Contractor shall at all times maintain the storm sewers and appurtenances so as to prevent obstructing surface water.

SECTION 260 STORM SEWERS

260.1 **Description** - Storm sewer construction shall consist of complete installation of sewers and appurtenances in accordance with the standards, drawings, general conditions, and detail specifications. Unless indicated otherwise in these specifications, the word "Sewer" shall refer to pipe sewers, box culvert sewers, or paved channels.

260.2 **Standards** - Whenever any reference is made to ASCE, ASTM, AASHTO, AWWA, and ASA Standard Specifications, the specification referred to shall be understood to mean the latest revision of said specifications or standards as amended to date of letting of Contract.

260.3 **Materials**

260.3.1 **Concrete** - Concrete used in the construction of concrete storm sewers and drainage structures and appurtenances shall conform to Section 250. Concrete Structures.

260.3.2 **Non-Reinforced Concrete Pipe** - All non-reinforced concrete pipe shall conform to ASTM Designation C 14-59. This specification covers non-reinforced concrete pipe intended to be used for the conveyance of sewage and storm sewers. For joints see Section 3 of these specifications.

260.3.3 **Reinforced Concrete Pipe** - All reinforced concrete pipe shall conform to ASTM Designation C 76-62T. This specification covers reinforced concrete pipe of twelve (12) to one hundred eight (108) inches and is intended for use in conveyance of storm water and for the construction of culverts.

260.3.4 **Corrugated Metal Pipe (CMP)** – All CMP shall be fabricated with circumferential corrugations and have riveted lap joint construction (annular riveted) <u>except</u> when the pipe ends within a structure (inlets, junction box, etc), then and only then will spiral (helical) pipe be allowed. Spiral (helical) pipe shall meet the same specifications as the annular riveted. All pipe and connecting bands shall conform to the requirements of the following tables.

Corrugated metal culvert pipe requirements shall conform to the following specifications unless otherwise specified by the plans and specifications or by the Engineer.

MATERIAL	SPECIFICATION (AASHTO)
Roadway pipes - Zinc Coated **and** Polymeric Coated Sheets and Coils	M36, M245, M218 & M246
Driveway & Stormwater pipes - Zinc Coated Sheets and Coils	M36 & M218

***** Aluminum Coated Sheets and Coils are not permitted.**

Minimum Guage Specifications for Corrugated Metal Pipe

CIRCULAR CULVERT PIPE

<table>
<tr><th>PIPE DIAMETER</th><th>2 2/3 X 1/2 CORR GUAGE</th><th>MINIMUM COVER</th><th>3 X 1 CORR GUAGE</th><th>MINIMUM COVER</th></tr>
<tr><td>12"</td><td rowspan="5">16</td><td rowspan="12">12"</td><td rowspan="8"></td><td rowspan="8"></td></tr>
<tr><td>15"</td></tr>
<tr><td>18"</td></tr>
<tr><td>21"</td></tr>
<tr><td>24"</td></tr>
<tr><td>30"</td><td rowspan="2">14</td></tr>
<tr><td>36"</td></tr>
<tr><td>42"</td><td rowspan="3">12</td><td rowspan="6">14</td><td rowspan="9">12"</td></tr>
<tr><td>48"</td></tr>
<tr><td>54"</td></tr>
<tr><td>60"</td><td rowspan="3">10</td></tr>
<tr><td>66"</td></tr>
<tr><td>72"</td></tr>
<tr><td>78"</td><td rowspan="8"></td><td rowspan="2"></td></tr>
<tr><td>84"</td><td rowspan="6">12</td></tr>
<tr><td>90"</td></tr>
<tr><td>96"</td></tr>
<tr><td>102"</td><td rowspan="4">24"</td></tr>
<tr><td>108"</td></tr>
<tr><td>114"</td></tr>
<tr><td>120"</td></tr>
</table>

ARCHED CULVERT PIPE

PIPE ARCH SPAN & RISE	2 2/3 X 1/2 CORR GUAGE	MINIMUM COVER	3 X 1 CORR GUAGE	MINIMUM COVER
17" X 13"	16	12"		
21" X 15"				
24" X 18"				
28" X 20"	14			
35" X 24"				
42" X 29"				
49" X 53"	12			
57" X 38"				
64" X 43"				
60" X 46"			14	12"
66" X 51"				
73" X 55"			12	
81" X 59"				
87" X 63"				
95" X 67"				24"
103" X 71"				
112" X 75"				
117" X 79"				
128" X 83"				
137" X 87"				
142" X 91"			10	

Whenever corrugated metal culverts are installed on Railroad Property which is occupied by tracks or which may be occupied by tracks at any time in the future, then it shall conform to the A.E.E.A. "Specifications for Corrugated Metal Culverts."

Diameter of Pipe	**Minimum Gauge of Metal**
12" TO 18"	14
20" TO 24"	12
26" TO 36"	10
38" TO 60"	08

Pipes larger than 60" require special consideration and special specifications.

Corrugated metal storm sewer pipe shall be handled in such a manner that it is not chipped, dented or bent. If in handling the culvert the base metal is exposed in any way then it shall be rejected or repaired to the satisfaction of the Engineer.

260.3.5 **High Density Polyethylene (HDPE) Pipe** - Pipe installation must meet the manufacturer recommendations and specifications. There are a wide range of HDPE pipe products on the market. The City Engineer must approve specifications of HDPE pipe to be used. (amended 5-20-2014, Ordinance No. 979)

260.3.6 **Encasement Pipe** - When circular corrugated iron lineal plat or structural plate pipes or tunnels are installed on railroad property which is occupied by tracks or by tracks at any time in the future, then it shall conform to A.R.E.A. "Specifications for Corrugated, Structural, Plate Culverts and Arches." The minimum gage of the metal shall be as follows:

Neutral Axis Diameter	Minimum Gage
48"	8
60"	8
62"	7
72"	7
74"	5
84"	5

260.4 **Joints for Concrete Pipe**

260.4.1. Flexible Compression Joints. Flexible compression joints may be made with rubber gasket, rubber "0" rings which shall conform with ASTM Destination C 443-59T.

260.4.2. Cement Mortar Joints may be made by thoroughly filling the joint, inside and outside, around the circumference of the pipe, with cement mortar. The mortar to be used shall consist of one (1) part of cement to three (3) parts of fine aggregate for cement mortar.

260.5 **Sewer Construction**

260.5.1 **Excavation and Backfill** - All excavation for structures, trench excavation, and backfilling for storm sewer construction and all related work shall be performed in accordance with **Section 201** of the specifications.

260.5.2 **Pipe Bedding** - For proper bedding, refer to the load tables recommended by the American Concrete Pipe Association or other material manufacturers. The type of bedding to be required shall be designated on submitted plans.

Should any excess material be removed from the ditch bottom, the space shall be filled with the approved material and thoroughly tamped, with a pneumatic tamper to the satisfaction of the Engineer, or replaced with a six (6) inch thick layer of approved granular material on top of other approved compacted materials.

Regardless of the method used to transfer the line and grade from the stakes to the sewer, each pipe shall be checked for line and grade using a method approved by the Engineer.

260.5.3 **Laying the Pipe -** All pipe shall be protected during handling against shock and free fall.

The laying of pipe in finished trenches shall be commenced at the lowest point and installed with the bell end forward or upgrade. All pipe shall be laid with ends abutting and true to line and grade. They shall be carefully centered so that when laid they will form a sewer with a uniform invert.

Each piece of pipe shall be checked for vertical and horizontal alignment immediately after being laid.

Preparatory to making pipe joints, all surfaces of the portions of the pipe to be jointed, or of the factory made jointing materials, shall be clean and dry. Lubricants, primer, adhesives, etc., shall be used as recommended by the pipe or joint manufacturer's specifications.

260.6 Manholes and Junction Chambers

260.6.1 **Precast Manholes -** Precast manholes shall be constructed as shown in the standard drawings, as specified herein and as directed by the Engineer.

260.6.2 **Manhole Base and Invert -** The manhole base and invert shall be constructed of **Class E** concrete as specified under **Section 250** of these specifications. All bases and inverts shall be poured individually in one continuous pour for each, unless otherwise specified and particular care taken to make channels smooth and perfect. All manhole inverts and bases shall conform to the applicable manhole standards.

Precast manhole bases may be used with precast manholes provided the design of the base has been approved.

260.6.3 **Manhole Rings and Covers -** The rings and covers of all manholes shall be set at the elevation shown on the drawings and solidly built into place and grouted with cement mortar. Any brick work that might be used shall be placed so that it will be water tight.

260.7 **Catch Basins and Inlets**

260.7.1 **Precast** - Precast catch basins shall be constructed in accordance with the standards or approved equal. Concrete for precast concrete basins shall conform to the applicable sections of these specifications for **Class D** concrete.

260.7.2 **Reinforced** - Reinforced concrete catch basins and inlets shall conform to the standard drawings and the applicable sections of these specifications for **Class D** and **Class E** concrete. Concrete cover over steel reinforcement shall be not less than one (1) inch for covers and one and one-half (1 1/2) inches for walls and floors. All exposed concrete shall have smooth steel trowel or brushed finish. Interiors of structures shall have the forms removed and surface voids filled.

260.8 **Reinforced Concrete Box Culverts**

260.8.1 **General** - Reinforced concrete box culverts shall be constructed in strict accordance with this section and **Section 250** of these specifications.

260.8.2 **Composition of Concrete** - To determine the actual mixed proportions of cement, aggregates and water proposed for use on the project, the Contractor shall furnish all the information required by the testing laboratory retained by the Engineer. The testing laboratory will proportion a concrete mix based upon the requirements of these specifications and will determine the compressive breaking strength of these specimens at seven (7) days and will determine that the mix is in strict compliance with the specifications.

260.9 **Paved Ditches and Rip-Rapping** - Paving concrete for paved ditches shall conform to **Class E** concrete specifications herein described and shall correspond with the standard drawings or approved equal.

Rip-rapping shall consist of rock or concrete and shall be approved by the Engineer prior to placement.

260.10 **Headwalls, Wingwalls and Endwalls** - Design of these structures shall conform to the standards attached or to the approved details as submitted by the Engineer. Concrete shall conform with **Class E** concrete as outlined under **Section 250** of these specifications.

260.11 **Railroad Crossings** - Wherever a railroad crossing is being constructed beneath or at grade the necessary permit for the construction will have been previously secured by the Contractor . It shall also be the responsibility of the Contractor to contact the railroad company prior to beginning of such crossings, and to proceed with the construction as directed by the railroad company.

All railroad crossings shall be made at right angles to the railroad tracks wherever possible, and shall be laid by jacking or tunneling.

260.12 **Traffic** - Provision shall be made for taking care of traffic in accordance with the Manual on Uniform Traffic Control Devices (MUTCD).

260.13 **Existing Utilities** - The Contractor shall contact Missouri One Call for location of existing utilities.

260.14 **Replacement of Pavement** - All pavement, surfacing, driveways, curb, walks, buildings, utility poles, guy wires, and other surface structures affected by construction operations in connection with the performance of the Contract, together with all sod and shrubs in yards, parks, and parking, shall be maintained and if removed, or otherwise damaged, shall be restored to the original condition thereof, as determined and approved by the Engineer, unless otherwise specified on the plans.

The Contractor shall be responsible for, including any damage caused by settlement of backfill placed beneath pavements, street, road, and driveway surfacing, and drainage and other structures, and beneath sod in yards, parkings, and parks, which may occur at any time prior to, and during a period of one (1) year from and after the date of final acceptance of the work covered by the Contract; during such period the Contractor shall at his own cost and expense refill all excavations where backfill damage to structures, pavements, surfacing, and sod caused by such settlement, to the satisfaction of the City. Should the Contractor fail to repair settlement which may occur as described above within thirty (30) days after being given notice thereof, the Owner shall have the right to repair such settlement and charge the cost of such repairs to the Contractor.

The Contractor will be held responsible for all damage to roads, highways, shoulders, ditches, embankments, bridges, culverts and other property, caused by him or any of his Subcontractors in hauling or otherwise transporting materials to and from the several sites of the work, regardless of the location of such damage. The Contractor shall make arrangements relative to the payment for, or repair or replacement of, such damage or damaged surfaces or structures which are satisfactory and acceptable to the Owners or Owner of such damaged surfaces or structures, or to their legally responsible officers, agents or other representatives, at the Contractor's own cost and expense.

SECTION 270 FERTILIZING

270.1 **Description -** This work shall consist of the application of lime and commercial fertilizer and soil preparation for seeding and sodding on areas shown on the plans or designated by the engineer.

270.2 **Material.**

270.2.1 Material used for soil neutralization, unless otherwise specified, shall be a pelletized bagged lime, or an agricultural lime with not less than 90 percent passing the No. 8 sieve and containing not less than 65 percent calcium carbonate equivalent.

270.2.2 The rate of application of lime shall be a minimum of 2,200 lbs/acre for agricultural lime or 1,100 lbs/acre for pelletized lime. Except as otherwise provided in this specification, the quantity of material required to provide the specified pounds of effective neutralizing material per acre shall be determined from the producer or distributor's certification of analysis furnished by the Director of the Missouri Agriculture Experiment Station, Columbia, Missouri in accordance with the Missouri Agricultural Liming Materials Act.

270.2.2.1 When agricultural lime is to be furnished from a source that has not been tested and certified in accordance with the Missouri Agricultural Liming Materials Act, the contractor shall notify the engineer at least 30 days prior to application of agricultural lime to permit sampling, testing and determination of the required rate of application. The engineer will determine the effective neutralizing material per ton of liming material by the following formula:

E.N.M. = % C.C.E. x Fineness Factor x 800 100 100 where: E.N.M. is the Effective Neutralizing Material per ton. % C.C.E. is the percent Calcium Carbonate Equivalent as determined by Association of Official Analytical Chemists (AOAC) methods of analysis. Fineness Factor = (% passing No. 8 sieve and retained on the No. 40 x 0.25) + (% passing No. 40 sieve and retained on the No. 60 x 0.60) + (% passing No.60). Gradation will be determined in accordance with AOAC wet sieving methods. The 800 is a constant representing the theoretical maximum quantity of calcium in one ton of lime.

270.2.2.2 If agricultural lime is furnished as a commercially bagged product, pelletized or otherwise, with a guaranteed product analysis shown on the bag listing the elemental properties and gradation, the E.N.M. shall be calculated in accordance with **Section 270.2.2.1**. Material may be accepted on the basis of bag label analysis.

270.2.3 Fertilizer shall be a standard commercial product that will supply a minimum of 145 pounds of total nitrogen (N), 435 pounds of available phosphoric acid (P 2 0 5) and 270 pounds of soluble potash (K 2 0) per acre. Material may be accepted on the basis of bag label analysis or supplier's certification and shall comply with all applicable Missouri fertilizer laws.

270.3 **Equipment -** Lime and commercial fertilizer shall be applied by mechanical equipment designed for this purpose.

270.4 **Construction Requirements**

270.4.1 The area to be limed and fertilized will be the area specified within the limits of construction; shall have a uniform surface free from rills, washes and depressions; and shall conform to the finished grade and cross section as shown on the plans. The soil shall be thoroughly broken up, worked, tilled and loosened to a minimum depth of 2 inches. The seedbed or sodbed shall be prepared by loosening the existing soil on the slope, rather than by the addition of loose soil.

270.4.2 Lime and fertilizer shall be applied evenly at the rates specified in this section and only when the soil is in a tillable condition. After application, the lime and fertilizer shall be mixed into the soil by disking, harrowing or raking to a minimum depth of 2 inches, unless applied hydraulically on slopes steeper than 2:1 (1:2) in accordance with **Section 275.3.2.1**.

270.4.3 Lime and fertilizer shall be applied separately, but may be incorporated into the soil in one operation.

270.4.4 Lime and fertilizer shall be applied not more than 48 hours before the seed is sown unless otherwise authorized by the engineer.

SECTION 272 MULCHING

272.1 **Description -** This work shall consist of the application of a mulch. All seeded areas shall be mulched.

272.2 **Material**

272.2.1 **Type 1 Mulch (Vegetative) -** The vegetative mulch shall be prairie hay or straw from oats, rye, wheat or barley. Prairie hay shall consist of any combination of any of the following plants: Big Bluestem, Little Bluestem, Indiangrass, Sideoats Grama and native wildflowers. The mulch shall be free of prohibited weed seed as stated in the Missouri Seed Law and shall be relatively free of all other noxious and undesirable seed. The mulch shall be clean and bright, relatively free of foreign material and be dry enough to spread properly. If the above specifications cannot be met practicably, hay of the following plants may, with the engineer's approval, be substituted: Smooth Brome, Timothy, Orchard Grass, Reed Canary Grass, Tall Fescue, Redtop, Kentucky Bluegrass, Alfalfa and Birdsfoot Trefoil.

272.2.2 **Type 2 Mulch (Vegetative with Asphalt Emulsion) -** The asphalt emulsion shall be SS-1, SS-1h, CSS-1 or CSS-1h conforming to the requirements of AASHTO M 140 or AASHTO M 208. The vegetative mulch shall be as specified in **Section 272.2.1**.

272.2.3 **Type 3 Mulch (Vegetative with an Overspray) -** The vegetative mulch shall be as specified in **Section 272.2.1**. The overspray material may be virgin wood cellulose fibers or recycled slick paper as herein specified. It shall not contain any germination or growth inhibiting substances. The overspray shall be green in color after application and shall have the property to be evenly dispersed and suspended when agitated in water. When sprayed uniformly over vegetative mulch, the mulch fibers shall form an absorbent cover, allowing percolation of water to the underlying soil. The mulch shall be packaged in moisture resistant bags with the net weight (mass) of the packaged material plainly shown on each bag. The mulch fibers shall not be water soluble.

272.2.3.1 **Virgin Wood Cellulose -** Virgin wood cellulose fibers shall be produced by either the ground or cooked fiber process and shall have the following properties: Moisture Content, percent by weight (mass), max 15 Organic Matter-Wood Fiber, percent by weight (mass), min 80 pH 4.3-8.5

272.2.3.2 **Recycled Slick Paper Mulch -** Recycled slick paper mulch shall be produced from printers slick paper containing wood cellulose and kaolin clay. Recycled newsprint or cardboard will not be allowed. The material shall be free of other material or fillers and shall have the

following properties: Moisture Content, percent by weight (mass), max 8 pH 4.5-6.5

272.2.3.3 The contractor shall furnish a manufacturer's certification in triplicate certifying that the overspray mulch materials complies with these specifications. The engineer may sample and test these materials prior to approval and use. Acceptance will be based upon a satisfactory certification and results of any test deemed necessary by the engineer.

272.2.4 **Type 4 Mulch (Embedded) -** The vegetative mulch shall be as specified in **Section 272.2.1**. The mulch shall be embedded by a disk type roller having flat serrated disks spaced not more than 10 inches apart and cleaning scrapers shall be provided.

272.3 Construction Requirements

272.3.1 **Type 1 Mulch (Vegetative) –** Type 1 Mulch shall be applied at the rate of 2 1/2 tons per acre.

272.3.2 **Type 2 Mulch (Vegetative with Asphalt Emulsion) –** Type 2 Mulch shall be applied by mechanical mulch spreaders equipped to eject, by means of a constant air stream, controlled quantities of the vegetative mulch and emulsified asphalt in a uniform pattern over the specified area. The mulching machine shall be so designed that the asphalt will be injected at the proper rate directly into the air stream carrying the straw, resulting in a uniform spotty tacking of the vegetative mulch with asphalt. The vegetative mulch shall be applied at the rate of 2 1/2 tons per acre. The application rate for the asphalt emulsion shall be 100 gallons per ton of straw.

272.3.3 **Type 3 Mulch (Vegetative with an Overspray) –** Type 3 Mulch shall be hydraulically applied over the vegetative mulch as a separate operation. Recycled slick paper shall be applied at the rate of 750 pounds per acre. Virgin wood cellulose fibers with 90 percent or more organic matter shall be applied at the rate of 750 pounds per acre and that with 80 to 89 percent inclusive shall be applied at a rate calculated as follows:

Rate lb/acre = 100 x 750 lb/acre Actual Percent Organic Matter

The overspray material shall be mixed with water in a manner to provide a homogeneous slurry. Equipment for mixing and applying the slurry shall be capable of applying it uniformly over the entire vegetative mulched area. The slurry mixture shall be agitated during application to keep the ingredients thoroughly mixed.

272.3.4 **Type 4 Mulch (Embedded) –** Type 4 Mulch shall be applied at the rate of 2 1/2 tons per acre. The mulch roller shall be operated approximately parallel to the

roadbed grade. The mulch shall be embedded in the soil a sufficient depth to prevent the loss of mulch by wind or water erosion. Excelsior blanket may be used in lieu of Type 4 Mulch at the option of the contractor.

272.3.5 All mulch shall be distributed evenly over the area to be mulched within 24 hours following the seeding operation. Following the mulching operation, precautions shall be taken to prohibit foot or vehicular traffic over the mulched area. Any mulch which is displaced shall be replaced at once, but only after the work preceding the mulching which may have been damaged as a result of the displacement has been acceptably repaired.

SECTION 275 SEEDING

275.1 **Description -** This work shall consist of preparing, liming and fertilizing a seedbed, and the furnishing and sowing of seed. All disturbed areas shall be seeded except: (1) sodded areas, (2) surfaced areas, (3) solid rock and (4) slopes consisting primarily of broken rock.

275.2 **Material**

275.2.1 Seed shall comply with the requirements of the Missouri Seed Law. Commercially available seed will be permitted, however, the percentages for purity and germination as certified by the supplier shall be subject to the approval of the engineer. The contractor shall supply the supplier's certifications to the engineer. Seed may be accepted on the basis of bag labels. If seed is accepted on the basis of bag labels, the contractor shall retain the bag labels and shall write a letter to the engineer stating the amount and type of seed. Unless otherwise specified, the seed mixture and rate of application shall be as specified below:

All Seasons	**Mixture %**
Kentucky Bluegrass	20% @ 90 lbs/per acre
Perernial Rye Grass	40% @ 310 lbs/per acre
Tall Fescue (No K31)	20% @ 325 lbs/per acre
Red Fescue	20% @ 175 lbs/per acre

SECTION 276 EROSION AND SEDIMENT CONTROL

276.1 **Description -** This work shall consist of furnishing, installing, maintaining and removing temporary pollution, erosion and sediment control measures; furnishing and placing permanent erosion control features; or a combination of both as shown on the plans or as designated by the engineer.

276.1.1 The contractor shall exercise effective management practices throughout the life of the project to control pollution. Pollutants such as chemicals, fuels, lubricants, bitumen, raw sewage or other harmful material shall not be discharged on or from the project. Temporary pollution control measures, such as storage and handling of petroleum products and other pollutants, shall be coordinated with temporary and permanent erosion control features that ensure economical, effective and continuous erosion and pollution control. This work shall also apply to work within easements designated by the Engineer.

276.2 **Material -** All material shall conform to the following details as follows:

Item	**Section**
Fertilizer and Lime	270
Straw for Bales	272
Mulching	272
Seed	275
Geotextile Fabric	285

276.3 **Construction Requirements -** The contractor shall provide immediate permanent or temporary pollution control measures to prevent contamination of adjacent streams or other bodies of water. Such work may involve the construction of temporary berms, dikes, dams, sediment basins, slope drains, and use of temporary mulches, seeding or other control devices or methods as necessary to control erosion and pollution.

276.3.1 The contractor shall incorporate all permanent erosion and pollution control features into the project at the earliest practicable time. Temporary measures shall be used to correct conditions that develop during construction which were not foreseen during the design stage; that are needed prior to installation of permanent pollution control features; or that are needed temporarily to control erosion that develops during normal construction practices, but are not associated with permanent control features on the project.

276.3.2 Clearing and grubbing operations shall be scheduled and performed so grading operations and erosion control features will follow immediately thereafter. The surface area of erodible earth material exposed at one time by clearing and grubbing, excavating fill or borrow shall not exceed 435,000 square feet within any individual drainage area without installation of erosion controls for that

drainage area. The total erodible surface area exposed at one time for the entire project shall not exceed 750,000 square feet without documented approval by the engineer.

276.3.3 The engineer will limit the additional amount of erodible surface areas exposed by clearing and grubbing, excavation, borrow and fill operations with the amount of fill area in which the finished grading, mulching, seeding and other such permanent erosion control measures are completed and properly maintained. Should seasonal limitations make such operations unrealistic, temporary erosion control measures shall be taken immediately.

276.3.4 Unless otherwise provided or approved in writing by the engineer, construction operations in streams or other bodies of water shall be restricted to those areas, which must be entered for the construction of temporary or permanent structures. Streams or other bodies of water shall be promptly cleared of all falsework, piling, debris or other obstructions placed therein or caused by construction operations.

276.3.5 Frequent fording of streams or other bodies of water with construction equipment will not be permitted. Temporary bridges or other structures shall be used wherever an appreciable number of streams or other bodies of water crossings are necessary. Unless otherwise approved in writing by the engineer, mechanized equipment shall not be operated in streams or other bodies of water except as may be required to construct channel changes and temporary or permanent structures. If a Corps of Engineer Section 404 or Department of Natural Resources Section 401 permit is applicable for a project, the permit requirements and conditions shall prevail.

276.3.6 The location of all local material pits, other than commercially operated sources, and all excess material sites shall be subject to the approval of the engineer. Erosion from construction operations and pollution control measures shall not cause water pollution.

276.3.7 In the event of conflict between these requirements and the pollution control laws, rules or regulations of other federal, state or local agencies, the more restrictive laws, rules or regulations shall apply.

276.3.8 Unless otherwise specified by the engineer, all temporary erosion control measures shall be removed by the contractor after permanent erosion control measures are established.

SECTION 277 TEMPORARY BERMS

277.1 **Description -** This work shall consist of constructing temporary berms of compacted soil at the top of fill slopes or transverse to the centerline of fills.

277.2 **Material -** Temporary berms shall consist of graded material from within the project limits, or any other suitable material approved by the engineer.

277.3 **Construction Requirements -** Temporary berms shall be constructed to the approximate dimensions as shown on the plans.

277.3.1 **Type A Berms -** Type A berms shall be machine compacted with a minimum of one pass over the entire width of the berm.

277.3.2 **Type B Berms -** Type B berms shall be machine compacted with a minimum of three passes over the entire width of the berm. Material removed from Type B berms shall be incorporated in the embankment when possible. The contractor shall dispose any excess or unsuitable material to a location as directed by the engineer.

277.3.3 **Type A and Type B Berms -** Temporary berms shall drain to a compacted outlet at a slope drain. On transverse berms, the top width of the berms may be wider and the side slopes flatter to allow equipment to pass over these berms with a minimal disruption.

277.3.4 **Type C Berms -** Type C berms shall be constructed of rock base material meeting the requirements of **Section 277.4** or other material as approved by the engineer. A straw layer or an equivalent erosion control blanket shall be placed on the upslope side of the Type C berm. The straw layer shall be placed in such a manner that the final compacted thickness is 2 inches. The material for the straw layer shall be Type 1 mulch meeting **Section 272**. The straw layer or equivalent erosion control blanket shall be removed and replaced as determined by the engineer.

277.4 Rock Base Material

277.4.1 The material source for rock base shall meet the approval of the engineer. Geologic conditions may vary from available subsurface information. Approval by the engineer of a source for the inherent stoned does not constitute approval of the final rock base product. Additional mechanical processing beyond excavation such as, but not limited to, scalping, size reduction, washing, etc., of the material may be necessary to comply with this specification.

277.4.2 Material for rock base shall be durable stone or broken concrete containing a combined total of not more than 10 percent of earth, sand, shale and non-durable

rock. Material from geologic filled sink deposits or stone indicating evidence of solution activity shall not be used.

277.4.3 The material shall be as large as can be conveniently handled within the limits of this specification. No particle dimension shall exceed 18 inches. There shall be at least some material with particle dimensions exceeding 12 inches. The material shall be uniformly graded form coarse to fine.

277.4.3 Broken sound concrete pavement may be used provided the ratio of the longest dimension measurement to thickness does not exceed 2:1 and provided there is no excessive exterior steel mesh that would affect compaction. Concrentrated forms of bituminous pavement (milled, crushed or chunked) shall not be used. Small, thin amounts adhering to broken concrete pavement will be allowed.

277.4.4 Acceptance of quality and size of material may be made by visual inspection at the job site.

SECTION 278 TEMPORARY SLOPE DRAINS

278.1 **Description -** This work shall consist of constructing temporary slope drains to carry water down slopes and reduce erosion. The method selected shall be approved by the engineer prior to construction.

278.2 **Construction Requirements -** The contractor shall provide temporary, impermeable slope drains to carry water or water with suspended solids down fill slopes until permanent erosion control measures are established. The contractor shall provide temporary slope drains on fill slopes at approximately 500 foot intervals or as directed by the engineer. All temporary slope drains shall be adequately anchored to the slope to prevent disruption of flow. Inlet ends shall be properly constructed to channel water into the temporary slope drain. Outlet ends shall have some means of dissipating the energy of the water to reduce erosion downstream. The contractor shall restore the site to the satisfaction of the engineer.

SECTION 279 TEMPORARY DITCH CHECKS

279.1 **Description -** This work shall consist of constructing and maintaining temporary ditch checks, removing sediment deposits from these ditch checks and disposing of the sediment at a location approved by the engineer.

279.2 **Construction Requirements**

279.2.1 **Type I Ditch Checks -** Type I ditch checks shall be constructed of straw bales, silt fence or an approved alternative erosion control measure. Type I ditch checks shall not be used where drainage areas exceed 3 acres or ditch slopes exceed 10 percent. Type II ditch checks may be substituted for Type I ditch checks.

279.2.1.1 **Straw Bale Ditch Checks -** Straw bale ditch checks shall be constructed according to the plans and specifications.

279.2.1.2 **Silt Fence Ditch Checks -** Silt fence ditch checks shall be constructed according to the plans and specifications.

279.2.1.3 **Alternative Ditch Checks -** Approved alternative ditch checks shall be installed and maintained according to the manufacturer's recommendations.

279.2.2 **Type II Ditch Checks -** Approved alternate Type II ditch checks may be used. Type II ditch checks shall not be used where drainage areas exceed 50 acres or ditch slopes exceed 10 percent.

279.2.2.1 **Rock Ditch Checks -** Rock ditch checks shall be constructed according to the plans and specifications with clean rock. A minimum of 50% of the rock shall have a diameter of 6 inches or greater with a maximum size of 9 inches. Silt fence or an equivalent filter fabric shall be placed beneath the rock ditch check as shown on the plans.

279.2.2.2 **Sand Bag Ditch Checks -** The sand bag ditch check shall be constructed as shown on the plans. Sand or rock for sand bags shall be a uniform granulation with a maximum aggregate size of 2 inches , shall be clean to allow percolation of water through the sand bag and meet the approval of the engineer. Sand bags shall be of tightly woven burlap or other material that is sufficiently durable to remain intact for the time intended. Sand bags shall be filled approximately ¾ full, shall weigh approximately 55 pounds and shall be securely closed. Sand bags shall be placed in the ditches at locations shown on the plans or as directed by the engineer. The sand bags shall be laid in horizontal courses, and successive courses shall break joints with preceding ones. The sacks shall be packed against each other and tamped to provide a uniform surface.

279.2.3 If the engineer determines a Type I or II ditch check is not suitable due to site conditions, a combination of ditch checks and erosion control blankets or rock blankets shall be designed to effectively reduce flow velocities.

279.3 **Maintenance -** The contractor shall replace ditch checks at the request of the engineer. Periodic sediment removal shall include removal and disposal of sediment to a location where it will not erode into construction areas, steams or other bodies of water. The contractor shall inspect the ditch checks for sediment accumulation after each storm event and shall remove the sediment when deposits reach approximately one-half the original height of the ditch check.

SECTION 280 SEDIMENT BASINS

280.1 **Description -** This work shall consist of constructing sediment basins as shown on the plans or as determined by the engineer to detain sediment. This work shall also include disposal of excavated material, sediment and basin removal and site restoration.

280.2 **Construction Requirements -** The area where a sediment basin is to be constructed shall be cleared of vegetation to enable sediment removal. The sediment basin shall be an excavated or dammed storage area with defined side slopes. Inlet and outlet areas shall be lined with rock riprap.

280.2.1 The inlet of a sediment basin shall be constructed with a wide cross-section and a minimum grade to prevent turbulence and to allow deposition of soil particles. When the depth of sediment reaches 1/3 the original depth of the structure in any part of the pool, all accumulation shall be removed.

280.2.2 The contractor shall dispose of accumulated sediment and excavated material removed during the construction of the sediment basin in locations where it will not erode into the construction areas, streams or other bodies of water.

280.2.3 Sediment basins shall remain in service until all disturbed areas draining into the structure have been satisfactorily stabilized. When use of a temporary sediment basin is to be discontinued, the contractor shall remove any sediment, backfill, and properly compact all excavations and restore the existing ground to its natural or intended condition.

SECTION 281 TEMPORARY SEEDING AND MULCHING

281.1 **Description -** This work shall consist of furnishing and applying fertilizer, seed, Type 1 mulch or other acceptable cover authorized by the engineer. This work shall produce a quick ground cover to reduce erosion in disturbed areas expected to be redisturbed at a later date. Finish grading of areas will not be required. Hydraulic seeding and fertilizing in accordance with **Section 275** will be allowed.

281.2 **Construction Requirements -** Seeding and mulching shall be a continuous operation on all cut and fill slopes, excess material sites and borrow pits during the construction process. All disturbed areas shall be seeded and mulched as necessary to eliminate erosion.

281.2.1 The contractor shall provide permanent seeding and mulching as shown on the plans following temporary seeding.

281.2.2 Temporary seeding mixtures of oats, cereal rye or wheat shall be applied at a rate of 100 pounds per acre. Temporary seeding mixtures of oats shall be applied only during the months of December through May.

281.2.3 Temporary mulch placed over temporary seed mixtures shall be applied in accordance with **Section 272.2.1**.

281.2.4 Fertilizer shall be applied at a rate of 40 pounds nitrogen (N) per acre.

281.2.5 Lime will not be required for temporary seeding.

281.3 **Construction Requirements**

281.3.1 The contractor shall install temporary silt fence as shown on the plans and at other locations directed by the engineer. Fence construction shall be adequate to handle the stress from hydraulic and sediment loading. Fabric at the bottom of the fence shall be buried a minimum of 6 inches to prevent flow under the barrier. The trench shall be backfilled and the soil compacted over the fabric. Fabric splices with a minimum 6-inch overlay shall be located only at a support post. Any installation method acceptable to the engineer will be allowed as long as the effectiveness and intent of the silt fence is achieved. All geotextile construction shall be in accordance with **Section 286**.

281.3.2 Post spacing shall not exceed 5 feet. Posts shall be driven a sufficient depth into the ground or placed on closer spacing as necessary to ensure adequate resistance to applied loads.

281.3.3 The silt fence shall be fastened securely to the upslope side of the post. When wire support fence is used, the wire shall extend into the trench a minimum of 2 inches.

281.3.4 The contractor shall maintain the integrity of silt fences as long as they are necessary to contain sediment runoff. The contractor shall inspect all silt fences immediately after each rainfall and at least daily during prolonged rainfalls. Any deficiencies shall be immediately corrected by the contractor. In addition, the contractor shall make a daily review of the silt fences in areas where construction activities have changed the natural contour and drainage runoff to ensure the silt fences are properly located for effectiveness. Where deficiencies exist, additional silt fences shall be installed as approved or directed by the engineer.

281.3.5 The contractor shall remove and dispose of sediment when accumulations reach approximately one-half the fence height, or sooner when directed by the engineer. If required by heavy sediment loading, a second silt fence shall be installed as directed by the engineer.

281.3.6 The silt fence shall remain in place until removal is directed by the engineer. Upon removal, the contractor shall remove and dispose of any excess silt accumulations, grade and dress the area to the satisfaction of the engineer, and establish vegetation on all bare areas in accordance with the contract requirements. The fence material shall remain the property of the contractor and may be used at other locations, provided the material continues to meet the requirements of this specification, is sound and not weakened by exposure to the elements.

SECTION 282 STRAW BALES

282.1 **Description -** This work shall consist of furnishing, installing, maintaining and disposing of bales of straw or other approved foliage used as a means of controlling sheet flow erosion, as shown on the plans or designated by the engineer.

282.2 **Material -** Bales shall be Type 1 mulch in accordance with **Section 272**.

282.3 **Construction Requirements**

282.3.1 The contractor shall place bales at the bottom of embankment slopes or on the lower side of cleared areas to divert runoff and to detain sediment from sheet flow. When used to divert runoff or detain sediment, the bales shall be adequately anchored to withstand the applied load.

SECTION 283 TEMPORARY SILT FENCE

283.1 **Description -** This work shall consist of furnishing, installing, maintaining, removing and disposing a wire-supported or self-supported geotextile silt fence designed to remove suspended particles from sheet flow passing through the fence and prevent sediment from polluting nearby streams or other bodies of water. The quantities of temporary silt fence shown on the plans may be increased or decreased at the direction of the engineer. At the engineer's discretion, the location may be modified to fit field conditions. Such variations in quantity will not be considered as alterations in the details of construction or a change in the character of the work.

283.2 **Material -** Geotextile Type 2 material shall conform to **Section 285**.

283.2.1 **Posts -** Wood, steel or synthetic posts may be used. Posts shall be of sufficient length, not less than 4 feet, to ensure adequate embedment while fully supporting the silt fence and shall have sufficient strength to resist damage during installation and support applied loads while in service.

283.2.2 **Support Fence -** All geotextile silt fence shall be supported either externally by wire or other approved mesh to a height of at least 24 inches or by a suitable designed-in support system capable of keeping the material erect. Either method shall be strong enough to withstand applied loads.

283.2.3 **Prefabricated Fence -** Prefabricated fence systems may be used provided they meet all of the above material requirements.

283.3 **Construction Requirements**

283.3.1 The contractor shall install temporary silt fence as shown on the plans and at other locations directed by the engineer. Fence construction shall be adequate to handle the stress from hydraulic and sediment loading. Fabric at the bottom of the fence shall be buried a minimum of 6 inches to prevent flow under the barrier. The trench shall be backfilled and the soil compacted over the fabric. Fabric splices with a minimum 6-inch overlay shall be located only at a support post. Any installation method acceptable to the engineer will be allowed as long as the effectiveness and intent of the silt fence is achieved. All geotextile construction shall be in accordance with **Section 286**.

283.3.2 Post spacing shall not exceed 5 feet. Posts shall be driven a sufficient depth into the ground or placed on closer spacing as necessary to ensure adequate resistance to applied loads.

283.3.3 The silt fence shall be fastened securely to the upslope side of the post. When wire support fence is used, the wire shall extend into the trench a minimum of 2 inches.

283.3.4 The contractor shall maintain the integrity of silt fences as long as they are necessary to contain sediment runoff. The contractor shall inspect all silt fences immediately after each rainfall and at least daily during prolonged rainfalls. Any deficiencies shall be immediately corrected by the contractor. In addition, the contractor shall make a daily review of the silt fences in areas where construction activities have changed the natural contour and drainage runoff to ensure the silt fences are properly located for effectiveness. Where deficiencies exist, additional silt fences shall be installed as approved or directed by the engineer.

283.3.5 The contractor shall remove and dispose of sediment when accumulations reach approximately one-half the fence height, or sooner when directed by the engineer. If required by heavy sediment loading, a second silt fence shall be installed as directed by the engineer.

283.3.6 The silt fence shall remain in place until removal is directed by the engineer. Upon removal, the contractor shall remove and dispose of any excess silt accumulations, grade and dress the area to the satisfaction of the engineer, and establish vegetation on all bare areas in accordance with the contract requirements. The fence material shall remain the property of the contractor and may be used at other locations, provided the material continues to meet the requirements of this specification, is sound and not weakened by exposure to the elements.

SECTION 284 TEMPORARY PIPE

284.1 **Description -** This work shall consist of installing temporary pipe of any material acceptable to the engineer, utilized to carry water under temporary roadways, silt fences, berms or other locations determined by the engineer and to prevent the contractor's equipment from coming in direct contact with water when crossing an active stream or other bodies of water or intermittent streams created during heavy rainfalls.

284.2 **Construction Requirements -** Installation of temporary pipe shall be in accordance with the specifications for permanent pipe and shall prevent water from causing erosion around the pipe. All backfill material for pipes shall be placed in 6-inch lifts and mechanically compacted. Compaction tests will not be required.

SECTION 285 GEOTEXTILE FABRIC

285.1 **Scope -** This specification covers geotextile for use in subsurface drainage, sediment control, erosion control or as a permeable separator.

285.2 **Material -** Geotextiles shall meet the physical and chemical requirements of AASHTO M 288 for the specified application except as modified herein.

285.2.1 **General**

285.2.1.1 No specific permeability values are required.

285.2.1.2 The U. S. Standard sieve number corresponding to the apparent opening size (AOS) shall not exceed 100 for geotextile used in contact with any soil with more than 50 percent passing the No. 200 sieve nor shall the AOS exceed 70 when used between any two dissimilar granular material, less than 50 percent passing the No. 200 sieve, or when used to control movement of fines from a granular backfill through structural joints or into a drain pipe.

285.2.1.3 During shipment and storage, geotextiles shall be protected from direct sunlight, ultra-violet rays, temperatures greater than 140 F, mud, dust and debris.

285.2.2 **Type 1, Subsurface Drainage -** Type 1 geotextile is intended for use in subsurface drainage as a filter to protect drainage media from clogging with fines from adjacent soil. Typical applications include lining of drainage trenches and wrapping drain pipes.

285.2.2.1 The minimum permittivity shall be 1.3 sec -1 .

285.2.2.2 The material may be either AASHTO Class A or Class B unless otherwise specified.

285.2.2.3 When material is furnished in the form of a knitted or woven sock to be stretched to fit snugly around perforated pipe, the grab strength requirements for AASHTO Class B applications may be reduced by 33 percent provided the minimum elongation is greater than 50 percent.

285.2.3 **Type 2, Sediment Control -** Type 2 geotextile is intended for use in supported or non-supported sediment control fencing.

285.2.4 **Type 3, Erosion Control -** Type 3 geotextile is intended for uses such as erosion control of slopes and channels when placed under rock blanket, rock ditch liner, etc.

285.2.4.1 The minimum permittivity shall be 1.0 sec -1 .

285.2.4.2 The material may be either AASHTO Class A or Class B unless otherwise specified.

285.2.5 **Type 4, Separation -** Type 4 geotextile is intended for use as a separation material to prevent mixing of dissimilar material and to control migration of backfill material through joints in structural elements. Typical applications include use between soil and select granular backfills behind retaining structures, box culvert joint wraps, placement behind mechanically stabilized earth wall facing panels, cover for drainage blankets and soil/rock fill separation in slide repairs.

285.2.5.1 The minimum permittivity shall be 1.0 sec -1 .

285.2.5.2 The material may be either high or medium survivability level unless otherwise specified.

285.3 Certification and Acceptance

285.3.1 The contractor shall furnish a manufacturer's certification to the engineer, for each lot of material furnished stating the name of the manufacturer, the chemical composition of the filaments or yarns and certifying that the material supplied conform to all requirements specified. The certification shall include or have attached typical results of tests from specific lots for all specified requirements.

285.3.2 Acceptance of the material will be based on the manufacturer's certification and upon the results of such tests as may be performed by the engineer.

SECTION 286 GEOTEXTILE CONSTRUCTION

286.1 **Description -** This work consists of installation of geotextile for use in subsurface drainage, in erosion control, as a permeable separator or as otherwise specified.

286.2 **Material -** All material shall conform to **Section 285.**

286.3 **Construction Requirements**

286.3.1 Areas on which geotextile is to be placed shall be reasonably smooth and free from mounds, windrows, debris or projections. Geotextile shall be placed in a manner to minimize wrinkles or creases in the material. When used for erosion control or to separate soil and granular material, geotextile shall be placed loose to the contour of the ground so as to be free to adjust to minor indentations and protrusions as rock or fill is placed against or over the material but secured sufficiently to preclude sliding or displacement during fill placement and under traffic. Geotextile shall be secured in place as necessary to perform the work with steel pins or by other suitable means.

286.3.2 Lengths and widths of geotextile shall be chosen to minimize the required number of overlaps or seams. Adjacent rolls or strips of geotextiles shall either be sewn in accordance with recommendations of the manufacturer to meet seam strength requirements of AASHTO M 288, or overlapped.

286.3.2.1 Overlaps shall be sufficient to prevent openings in the geotextile coverage as a consequence of subsequent filling operations and shall meet the following minimum requirements: 18" overlap on slopes 3:1 or flatter; 24" on slopes steeper than 3:1; 36" if placed underwater or on soft, yielding ground which, in the opinion of the engineer, ruts excessively under construction traffic; 12" when used to cover structural joints or drain pipes; and equal to the trench width, when used to line drainage trenches unless otherwise shown on the plans.

286.3.2.2 Strips installed horizontally on slopes shall be overlapped upslope over downslope. Strips placed transverse to channel slopes shall be overlapped in the direction of flow. If a preformed "sock" is not used to cover pipe embedded in sand, the pipe shall be wrapped one and one-half times, tied or otherwise secured at intervals as required to maintain the integrity of the overlap and laid in the trench with the exposed lap end oriented toward the bottom of the trench.

286.3.2.3 Fill placement and spreading on geotextile shall not be performed against the direction of geotextile overlap.

286.3.3 Traffic shall not operate directly on uncovered geotextile. Sudden stops, starts and turning motions shall be kept to a minimum unless at least two lifts of overfill

are in place. Unless otherwise specified, the initial lift of overfill shall not be less than 8 inches, loose measurement, in thickness or twice the maximum particle size, whichever is greater.

286.3.4 Damaged or punctured geotextile shall be replaced or patched to the satisfaction of the engineer. Patches may be sewn or overlapped. Unsewn patch overlaps beyond the area of damage shall exceed roll overlap requirements of this section by at least 12 inches.

286.3.5 Type 3 (Erosion Control) geotextile shall be protected from damage due to the placement of large rock by limiting the height of drop of the material to no greater than three feet. In addition, if a Class B geotextile is used, either a cushioning layer of sand shall be placed on top of the geotextile or a zero drop height shall be utilized to place the rock. Regardless of the required placement technique, the contractor shall demonstrate that the placement technique will prevent damage to the geotextile. Placement of material shall begin at the toe and proceed up the slope.

286.3.6 When placed behind wall panels or facing elements, geotextile shall be installed and secured in a manner proposed by the contractor and approved by the engineer such that migration of fines is controlled while allowing free drainage.

286.3.7 Drainage trenches to be lined with Type 1 (Subsurface Drainage) geotextile shall be prepared with smooth sides and bottoms. The geotextile shall be placed to conform loosely to the shape of the trench and laid back on either side of the trench to allow for placement of aggregate backfill and pipe. Backfill compaction shall be done in a manner to prevent damage to the geotextile. After compaction, the geotextile shall be lapped over the completed installation trench width or as shown on the plans.

286.3.8 The U. S. Standard sieve number corresponding to the apparent opening size (AOS) shall not exceed 100 for geotextile used in contact with any soil with more than 50 percent passing the No. 200 sieve, nor shall it exceed 70 when used between any two dissimilar granular material, less than 50 percent passing the No. 200 sieve, or to control movement of fines from a granular backfill through structural joints or into a drain pipe.

286.3.9 During shipment and storage, geotextiles shall be protected from direct sunlight, ultra-violet rays, temperatures greater than 140 F, mud, dust and debris.

SECTION 287 EROSION CONTROL BLANKET

287.1 **Description -** This work shall consist of furnishing and placing erosion control blankets at locations shown on the plans or as designated by the engineer.

287.2 **Material**

287.2.1 **Blanket** - Blanket shall consist of North American Green SC150 or equal approved by the Engineer

287.2.2 **Material Composition**

Top Net	Heavyweight UV stabilized polypropylene 3 lbs/1000 sq ft approximate weight
Straw/Coconut	70% straw at 0.35 lbs/sq yd
Matrix	30% coconut at 0.15 lbs/sq yd
Bottom Net	Lightweight photodegradable polypropylene 1.64 lbs/1000 sq ft approximate weight
Thread	Degradable

287.2.3 **Roll Specifications**

Width	6.67 ft
Length	108.00 ft
Weight	40.00 lbs ± 10%
Area	80.00 yds^2
Stitch Spacing	1.50 inches

287.3 **Installation -** Blankets shall be installed as per the manufacturer's instructions and shall use materials specified by the manufacturer and approved by the Engineer.

SECTION 288 STREET SIGNS AND POSTS

288.1 **Description -** This specification contains materials required for Street ID / Name Signs installation in the City of Ashland.

288.2 **Regulatory Signs –** Warrants and Placement shall be made consistent with the Boone County Traffic Manual, July 2002, or the "Manual on Uniform Traffic Control Devices – Millennium Edition" (MUTCD).

288.3 **Street ID / Name Signs –** Placement shall be consistent with **Section 2.8** of the Boone County Traffic Manual, July 2002.

288.4 **Street ID / Name Sign Mounting** – All Street Name Signs shall be mounted on Uni-Strut type posts with two (2) one (1) sided sign blanks mounted on opposite sides of the post. At least two (2) spacers shall be used per two (2) blanks. The signs must be riveted to the post.

288.5 **Street ID / Name Sign Blanks** – Blanks shall be 0.135" thick X 10" or 13" Green Fiberglass FRP.

288.6 **Lettering -** Street ID / Name signs shall have reflective white lettering, engineering grade, on a green background.

288.6.1 Street name signs for all private roads shall have non-reflective black lettering on a reflective white background. An informational placard stating "Private Road" shall have non-reflective black lettering on a reflective white background. **See Appendix B-1, Drawing 540.00.**

288.6.2 All numbers and letters shall conform to current industry standards for highway applications and also to specifications in the most current Manual for Uniform Traffic Control Devices (MUTCD). For local roads with a speed limit of 60 miles per hour or less, street name signs shall have six (6") inch white reflective upper case- **See Appendix B-1, Drawing 540.00.**

288.6.3 For local roads with a speed limit of 60 miles per hour or greater, street name signs shall have nine (9") inch white reflective upper case-letters, set three quarter (3/4") inches above the bottom of the sign. **See Appendix B-1, Drawing 540.00.**

288.6.4 Any supplementary lettering that indicates the type of street, such as Street, Lane, Circle, Drive or Road, shall have a minimum height of three (3") inches and shall be abbreviated as ST, LN, CIR, DR and RD. The street coordinates and directional letters (i.e. 2000 NE, 2000 SE, NW, etc.) shall be two (2") inches in height and shall be three quarter (3/4") inches above the top of the road name and a half (1/2") inch from the top of the sign. The street coordinates

and directional letters shall be in the upper right hand corner or upper left and right corners if there are two (2) sets of street coordinates.

288.6.5 There is to be a minimum of five (5") inches and a maximum of six (6") inches between each word on multiple word roadway names.

288.7 **Sign Post Materials**

288.7.1 **U-Channel Post Material and Finish -** Steel U-Channel Posts shall conform to the standard specification for hot rolled carbon steel, structural quality, ASTM designation A570, Grade 50. Yield strength after cold-forming shall be 60,000 psi. minimum. Finish shall be a baked green enamel paint.

288.7.2 **Uni-Strut Post Shape -** The cross section of the post shall be square tube formed of 12 gauge steel material, carefully rolled to size and shall be welded directly in the corner by high frequency resistance welding and externally scarfed to agree with corner radii.

288.7.3 **Uni-Strut Telespar Post and 2-Piece Break-Away Material and Finish -** Post size shall be 1 ¾"x 1 ¾" square and anchor shall be 2"x 2"square x 3' in length. The post and break-away shall be manufactured from hot-dipped galvanized steel conforming to ASTM designation A653, Grade 50, Class 1. The corner weld shall be zinc coated after scarfing operations. The steel shall also be coated with a chromate conversion coating and a clear organic polymer topcoat. Both the interior and the exterior of the post and anchor shall be galvanized.

288.7.4 **U-Channel and Uni-Strut Telespar Post / 2-Piece Break-Away Hole Spacing –** Posts shall be manufactured with perforated holes 7/16 + or – 1/64 inches in diameter on 1-inch centers on all four (4) sides (one side on u-channel) down the entire length of the post. Holes shall be on centerline of each side in true alignment and opposite each other directly and diagonally.

288.7.5 **Length Tolerance -** The length of each post shall have a permissible length tolerance of ¼" + / -.

288.7.6 **Telescoping Properties -** The finished post and anchor shall be straight and have a smooth, uniform finish. It shall be possible to telescope all consecutive sizes of square tubes freely and for not less than 10 feet of their length without the necessity of matching any particular face to any other face. All holes and ends shall be free from burs and ends shall be cut square.

Appendix B
Driveway Locations and Culverts

1.1 **GENERAL INFORMATION** - An application for a Right of Way Access Permit (driveway) must be submitted to and approved by from the Director, prior to constructing any driveway entrance (temporary or permanent). Driveway location must be approved by the Director. Driveway culverts shall be located as per **Drawing 410.04** or as directed by the Director. Driveway culvert pipe sizes must be approved by a representative of the Director prior to installation. The minimum pipe size shall be 15 inches in diameter unless the property owner shows to the satisfication of the City Engineer that a smaller pipe size is justified. The minimum pipe length shall be 24 feet. Pipe specifications shall meet **Section 260.3.4** of **Appendix A-1**, Construction & Materials Specifications. If requested by the Director or authorized representative of the City, erosion protection shall be required which may include filter cloth, rock ditch liner, rip rap or approved equivalent.

Culvert pipes greater than 30 ft. in length shall increase one pipe size in diameter unless otherwise designed by an engineer, submitted to the City for review, and approved by the City. No pipe longer than 50' shall be installed without prior approval by the Director. All driveways shall be constructed in such a manner as to not direct excessive drainage onto the street surface or in excess of the gutter capacity. Culverts not meeting the specifications and/or causing drainage problems will be removed as necessary to correct the drainage problems. All costs of new culvert installations shall be borne entirely by the property owner or developer unless otherwise approved by the City.

All driveway culverts shall be annular riveted corrugated metal pipes with a minimum of zinc coating, reinforced concrete pipe or high density polyethylene pipe. All culvert pipes must meet or exceed MoDot standards construction and materials specification.

When a driveway culvert is to be constructed outside of right of way or street or stormwater easement, the City may require the property owner to dedicate a stormwater easement to the City. (amended 7-15-2014, Ordinance No. 985)

1.2 **DRIVEWAY LOCATIONS –** Driveway Locations shall be defined as the distance from the point of curvature or end of triangular driveway flare to either the next driveway's point of curvature or end of triangular driveway flare or the point of curvature of an intersecting street. The minimum distances for which accesses will be allowed are shown in Standard **Drawings 410.01A** and **410.01B**.

1.3 **GEOMETRICS**

1.3.1 **ENTRANCE ONTO CURB AND GUTTER STREETS** -
Driveway locations shall meet the geometric requirements as shown on Standard **Drawings 410.01 A** , **410.02, 410.03 and 410.05**.

1.3.2 **ENTRANCES ONTO NON-CURB AND GUTTER STREETS** –
Driveway locations shall meet the geometric requirements as shown on Standard **Drawings 410.01B** and **410.04**.

1.4 **INSTALLATION OF DRIVEWAY CULVERTS** - It will be the responsibility of the permit holder to purchase all materials and to install the driveway culvert. The Director shall determine pipe diameter size, final location of pipe and determine any other special conditions, that exist which may warrant additional work based upon stopping sight distance and drainage requirements.

The Director shall inspect the installation within five (5) business days of notification of completion by the permit holder. When major street improvements (not considered normal maintenance by the Director) are performed and/or contracted by the City, the City shall be responsible for upgrading driveway entrances and drainage improvements to meet these regulations. Any variance from this policy must follow the procedures as established for a variance as stated in this regulation.

1.5 **SIGHT DISTANCE FOR DRIVEWAYS**

Preparation for issuing a driveway permit must include a prior inspection of the driveway site to insure that vehicles can enter and exit from the proposed driveway with a minimum hazard and disruption of traffic along the street. Sight distance for driveway construction should be considered essential in the design of commercial or industrial type driveways and desirable with respect to residential driveways. If there is a request to construct a driveway at a reasonable location, a traffic study must include an on-site inspection to evaluate the sight distance.

There are two basic concerns of responsibility when considering the sight distance requirements for any driveway. The first concern is to provide maximum safety for the motoring public. The second concern is to provide for access to the adjacent property owners. Vertical and horizontal alignments of many existing streets are based on 30 mph design speed while the posted speed is often higher.

Fortunately, adjacent property owners who are constructing new driveways to an existing route, are usually anxious to consider the safest location for a driveway.

The following criteria based on the American Association of State Highway and Transportation Officials (AASHTO) guidelines and the Design Manual has been developed in order to establish a uniform method of determining the Minimum Entrance Stopping Sight Distance for a driveway constructed by permit. The sight measurement is based on a 3.5-foot height of eye and a 4.25-foot height of object. The use of the 4.25-foot object is based on fact that typically the only change in the street is that there is now an additional entrance to the street and a vehicle is the expected object using the driveway and the existing route.

If the Minimum Entrance Stopping Sight Distance is not met, the permit will not be

approved. An appeal may be made to the Board of Aldermen.

Both vertical and horizontal alignment can limit sight distance. In order to measure actual sight distance limited by vertical alignment **(See Appendix B-1, Drawing 410.01C)**, place a sighting target 4.25 feet above the edge of pavement at a point 12 feet from the edge of pavement (approximate location of a driver approaching the street) at the proposed driveway

location. Sighting from a height of 3.5 feet, move along the street away from the proposed driveway site to a point beyond where the target disappears. Now move toward the target until it can first be seen and place a mark on the pavement. Measure the distance along the street between the mark and the target. Measurement may be made with an accurate measuring device mounted on an automobile. This measured distance is the sight distance.

Horizontal Sight Distance **(See Appendix B-1, Drawing 410.01C)** is determined by placing a target 4.25 feet above the edge of pavement and 12 feet from the edge of pavement at the proposed driveway location. Move away from the target along the street and around the horizontal curve until the target is out of sight or the line of sight is beyond the right of way limits. The line of sight must stay within the limits of the right of way. Consideration may also be given to vegetation both on the right of way and adjacent to the right of way as it may impede vision more at one time of the year than another. Sighting from a height of 3.5 feet, move along the street toward the target until it can first be seen and place a mark on the pavement. Measure the distance to the driveway target along the street. This measured distance is the sight distance.

Posted speed at horizontal curves <u>may</u> be used to determine required sight distance for driveways within the limits of a horizontal curve.

Even when the applicant is present, sight distance measurements in terms of feet may be difficult for an applicant to understand when it comes to getting on and off the street. A measurement of time lapse may help the applicant get a better understanding of critical nature of the situation.

A sight distance visibility time for the driver exiting a driveway to see an approaching vehicle can be used. A value of 7 seconds enables a stopped passenger car to cross a 2-lane highway. A value of 10 seconds allows vehicles exiting the driveway to turn left or right onto 2-lane roads without interference (slowing down) of through traffic at speeds up to 30 mph. At speeds greater than 30 mph, the value of 10 seconds will require some slowing of through traffic.

Trucks require greater sight distance than needed for passenger cars, however, the greater driver eye height, typically over 6 feet, provides an allowance for vertical curve conditions. If the obstruction to a sight is a horizontal curve or other lateral blockage, a 50% increase in visibility is recommended.

Grading of the right of way to improve sight distance should be considered by the applicant.

SIGHT DISTANCE REQUIREMENTS

Posted Speed (MPH)	Minimum Entrance Stopping Sight Distance
30	200
35	225
40	275
45	325
50	375
55	425
60	525
65	600
70	700

The above distances are based on Table III-1 and Figure IX-41 of the AASHTO Green Book 1994 edition.

1.6 **CULVERT POLICY PROCEDURE**

A. An application for a driveway permit shall be applied for at City Hall.

B. A copy of the application will be forwarded to the Director for processing.

C. The applicant shall contact the Director at 573-657-2568 to schedule an appointment for review of the proposed installation site.

D. The Director shall, upon meeting with the applicant and reviewing the location, issue a permit with written requirements for culvert installation. The requirements shall include pipe diameter, length of pipe, flow line direction, minimum depth of cover and any other special circumstances that may need to be addressed.

E. The permit holder shall install the culvert pipe as per **Appendix B-1, Drawing 410.04.** Upon completion, the permit holder shall notify the The Director Department for a final inspection.

F. Within five (5) Business days after notification of completion, a representative shall inspect the installation and record his/her findings on the permit. If the installation is found to be deficient, the representative shall supply the permit holder with a list of the deficiencies. When corrected, the permit holder will notify the Director to prompt a re-inspection. If the installation is found to be satisfactory, the representative shall forward a copy of the closed permit to the City Clerk.

G. The City Clerk will note that the driveway permit requirements have been satisfied.

H. Driveway location <u>must be approved</u> by the Director before the footings are poured.

This page has been intentionally left blank.

Appendix B-1

Standard Construction Drawings

Table of Contents

TYPICAL STREET SECTIONS

110.01	Local Street with Shoulders
110.02	Local Street with Curb and Gutter
110.03	Collector Street with Shoulders
110.04	Collector Street with Curb and Gutter
110.05	Arterial Street with Shoulders
110.06	Arterial Street with Curb and Gutter
110.08	Typical cul-de-sac - Local Street with Shoulders
110.09	Typical cul-de-sac - Local Street with Curb and Gutter
110.11	Typical offset cul-de-sac – Local Patching
120.01	Patching Paved Streets

CONCRETE PAVEMENTS

200.01A	Joint Details
200.01B	Joint Details
210.01	Residential Street
220.01	Collector Street

DRIVEWAYS – SIDEWALKS – RAMPS

Miscellaneous	400.01	Curb Details – Sidewalk Ramp
	400.02	Curb Details – Residential Driveways
	400.03	Curb Details – Commercial Driveway
Driveways	410.01A	Driveway Locations with Curb and Gutter

Standard Construction Drawings (Continued)

	410.01B	Driveway Locations without Curb and Gutter
Sight Distance	410.01C	Sight Distance Diagram
	410.02	Driveway – Residential with Curbs
	410.03	Driveway – Commercial with Curbs
	410.04	Driveway - Non-curb and Gutter
	410.05	Alternate Expansion Joint for Driveways on PCC Streets
Sidewalks	420.01	Sidewalk
	420.02	Sidewalk at Back of Curb
	420.03	Sidewalk Reinforcement at Drainage Structure
Ramps – Sidewalks With Grass Parkway	430.01	Sidewalk Ramp – Type A
	430.02	Sidewalk Ramp – Type B
	430.03	Sidewalk Ramp – Type C
	431.01	Mid-block Sidewalk Ramp
Ramps – Sidewalks At Back of Curb	432.01	Sidewalk Ramp – Type A
	432.02	Sidewalk Ramp – Type B
	432.03	Sidewalk Ramp – Type C
	433.01	Mid-block Sidewalk Ramp
Ramps – General	435.01	Detectable Warnings
Patching	440.01	Patching Driveways and Sidewalks

STORM DRAINAGE

Miscellaneous	500.01	Drainage Structure Steps
	500.02	Drainage Structure Invert
	500.03	Inlet Opening Trash Rack
	500.04	Drainage Structure Weep Holes
Curb Inlets	505.01A	Type M Inlet – Plan and Sections
	505.01B	Type M Inlet – Notes

Standard Construction Drawings (Continued)

	505.01C	Type M Inlet – Section and Detail
	505.01D	Type M Inlet – Setting Diagram
	505.01E	Type M Inlet – Deflector Detail
	505.01F	Type M Inlet – Edge Angle Assembly
	505.02	Type A Inlet
Junction Boxes and	510.01	Junction Box
Area Inlets	510.02	Side Opening Inlet
	510.03	Catch Basin
Outfalls	525.01	Toewall and End Section
	525.02	Rock Lining for Culvert Outfalls
	525.03	CMP – Mitered End Detail
Swales	530.01	Concrete Swale – V Type
	530.02	Concrete Swale – Flat Bottom Type
	530.03	Rip Rap with Filter Fabric
Signs	540.00	Street Signs and Posts

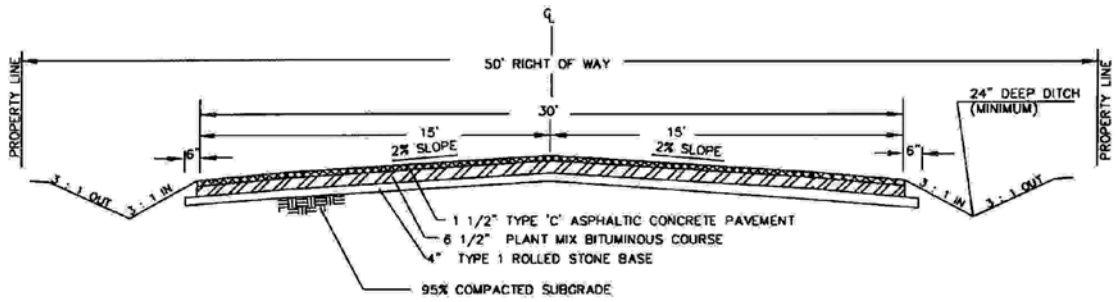

ASPHALT PAVEMENT WITH SHOULDERS

NTS

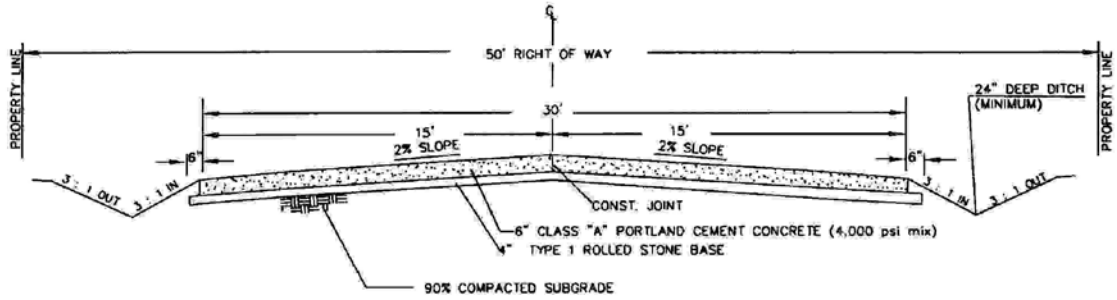

CONCRETE PAVEMENT WITH SHOULDERS

NTS

DWM 02/19/02 Approved Date Revisions	COUNTY OF BOONE MISSOURI PUBLIC WORKS	LOCAL ROAD WITH SHOULDERS TYPICAL CROSS SECTIONS	110.01

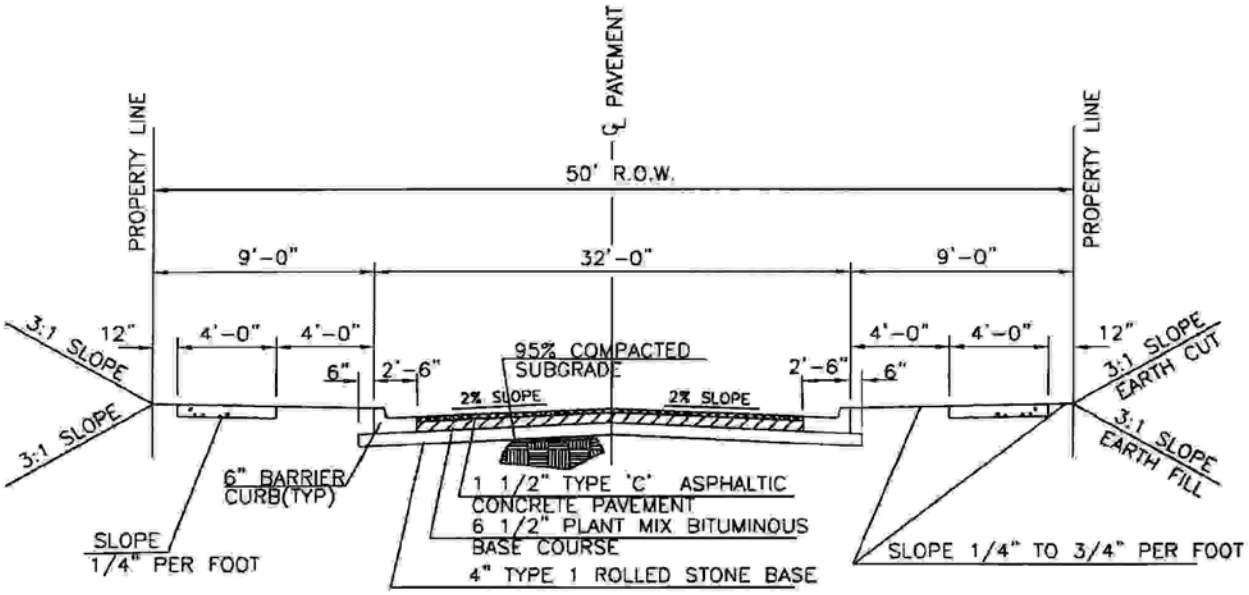

32 FT. ASPHALT PAVEMENT
(Standard)

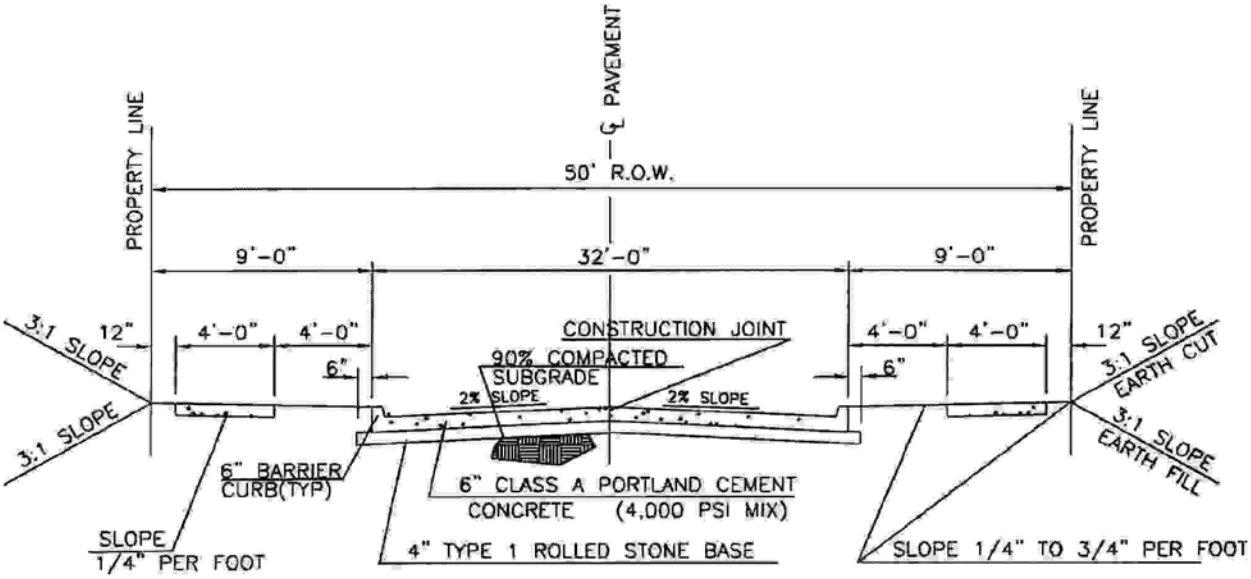

32 FT. P.C.C. PAVEMENT
(Standard)

DWM Approved 02/19/02 Date Revisions	COUNTY OF BOONE MISSOURI PUBLIC WORKS	LOCAL ROAD WITH CURB AND GUTTER TYPICAL CROSS SECTIONS	110.02

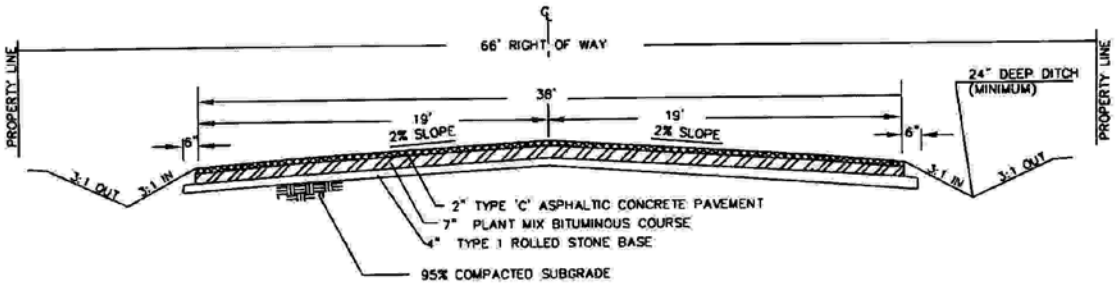

ASPHALT PAVEMENT WITH SHOULDERS

NTS

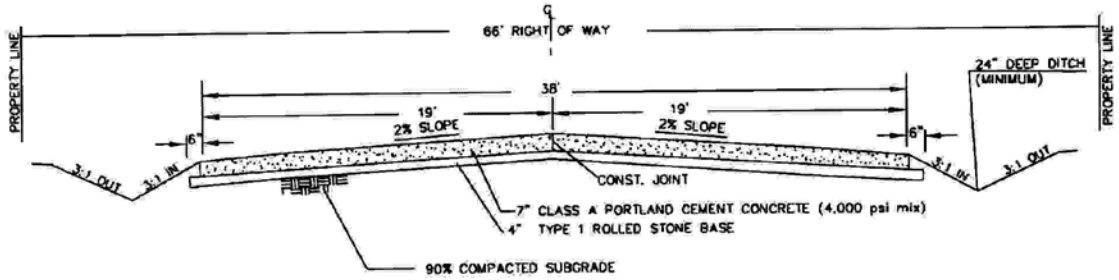

CONCRETE PAVEMENT WITH SHOULDERS

NTS

Approved 02/19/02 Date	COUNTY OF BOONE MISSOURI PUBLIC WORKS	COLLECTOR ROAD WITH SHOULDERS TYPICAL CROSS SECTIONS	110.03
Revisions			

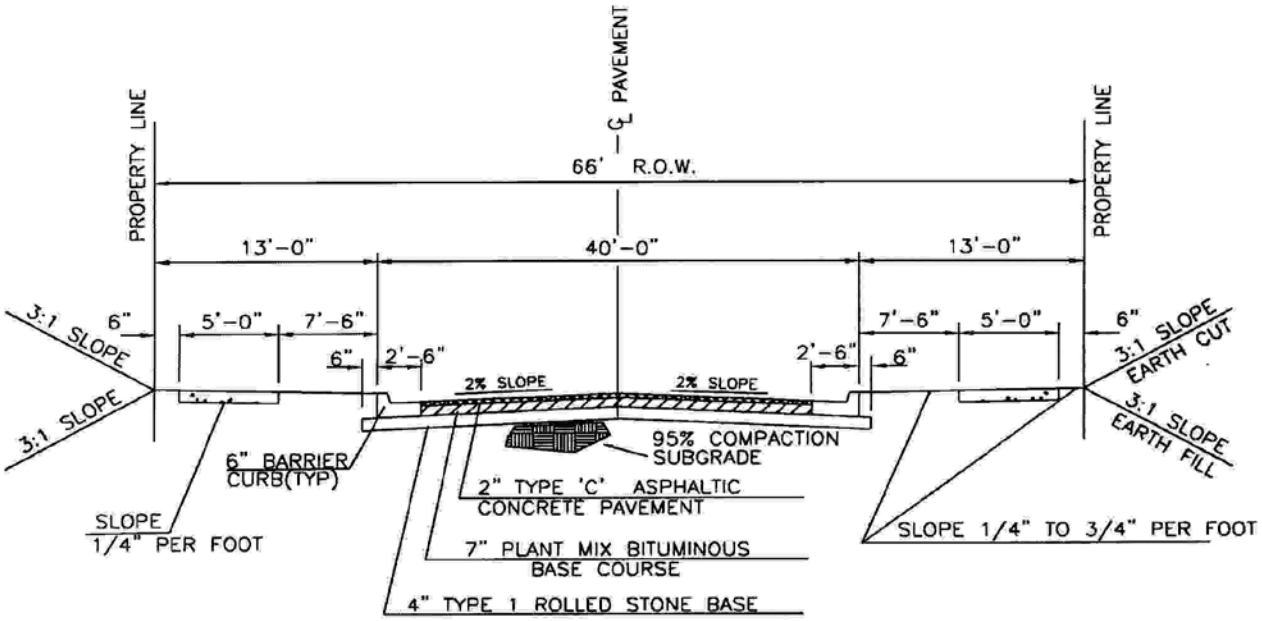

40 FT. ASPHALT PAVEMENT
(Standard)

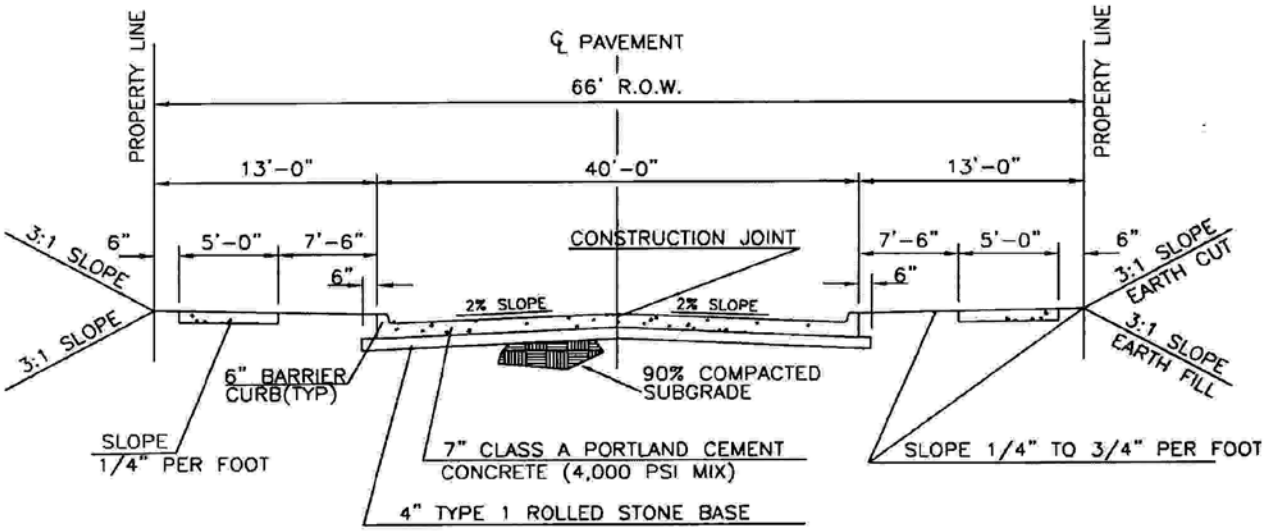

40 FT. P.C.C. PAVEMENT
(Standard)

Dwm Approved	02/19/02 Date	COUNTY OF BOONE MISSOURI PUBLIC WORKS	COLLECTOR ROAD WITH CURB AND GUTTER TYPICAL CROSS SECTIONS	110.04
Revisions				

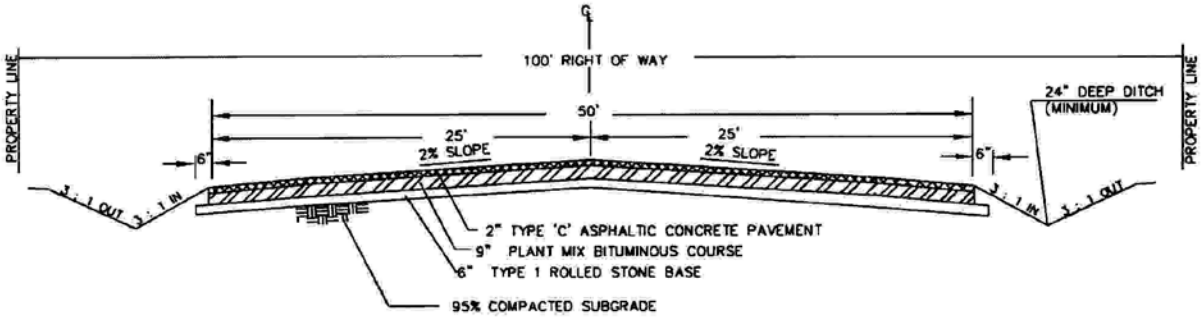

ASPHALT PAVEMENT WITH SHOULDERS

NTS

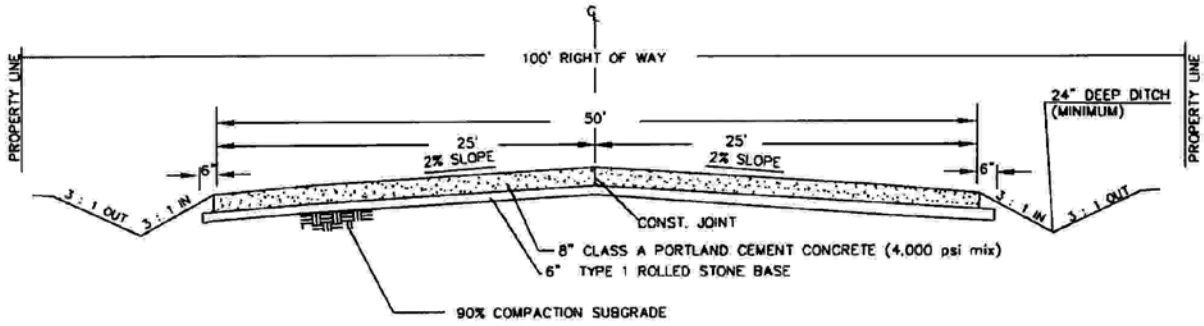

CONCRETE PAVEMENT WITH SHOULDERS

NTS

Approved 02/19/02 Date	COUNTY OF BOONE MISSOURI PUBLIC WORKS	ARTERIAL ROAD WITH SHOULDERS TYPICAL CROSS SECTIONS	110.05
Revisions			

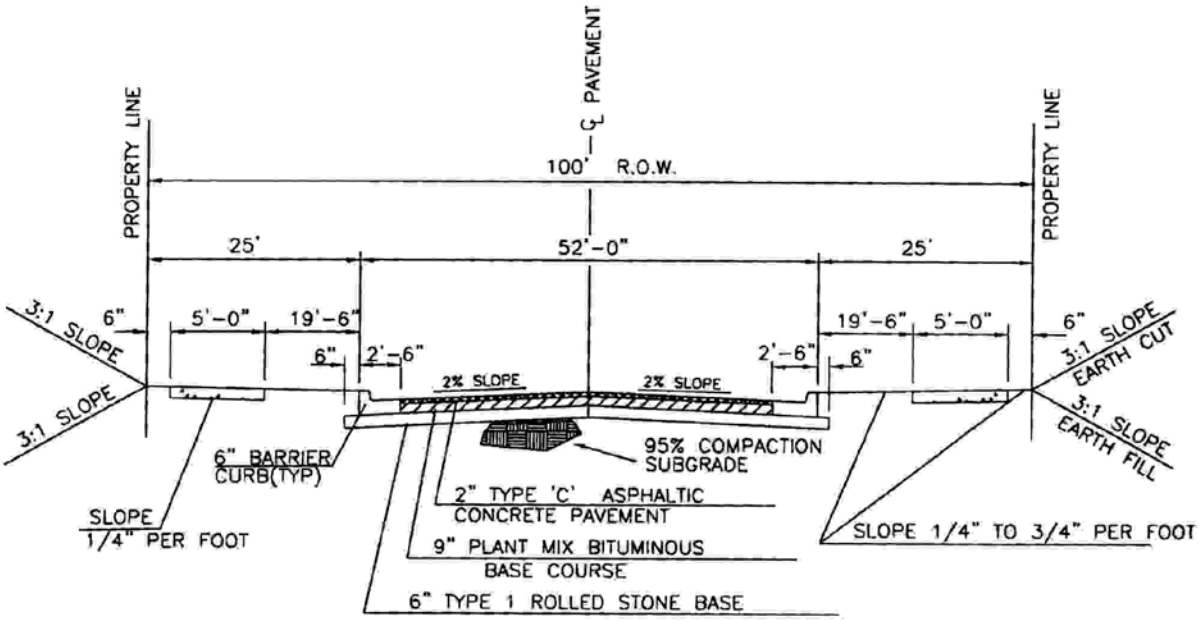

50 FT. ASPHALT PAVEMENT
(Standard)

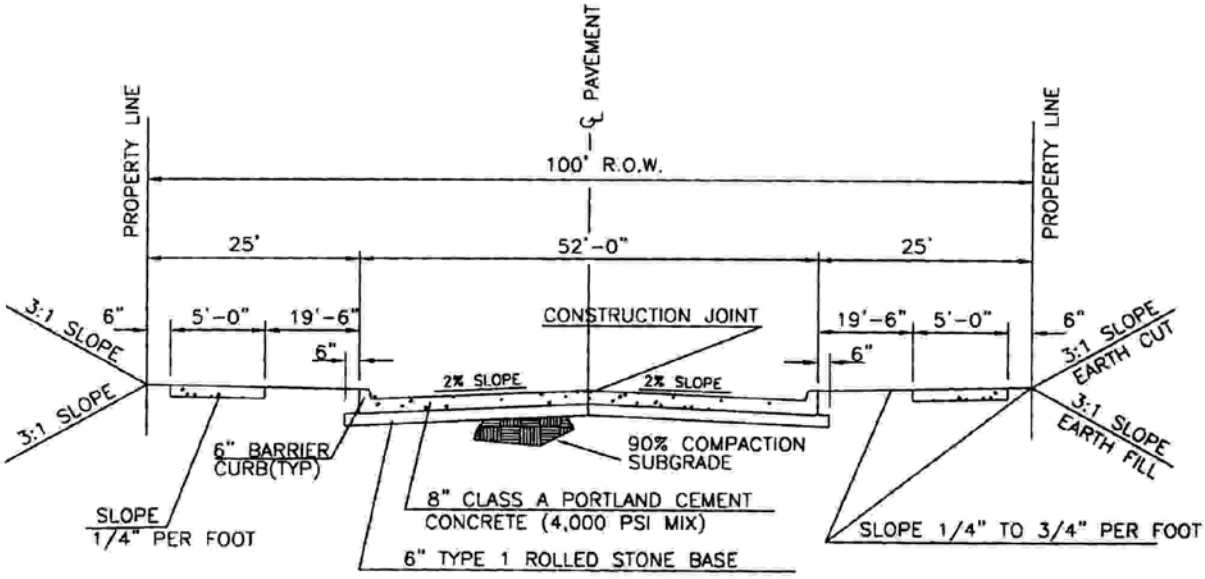

50 FT. P.C.C. PAVEMENT
(Standard)

Approved 02/19/02 Date Revisions	COUNTY OF BOONE MISSOURI PUBLIC WORKS	ARTERIAL ROAD WITH CURB AND GUTTER TYPICAL CROSS SECTIONS	110.06

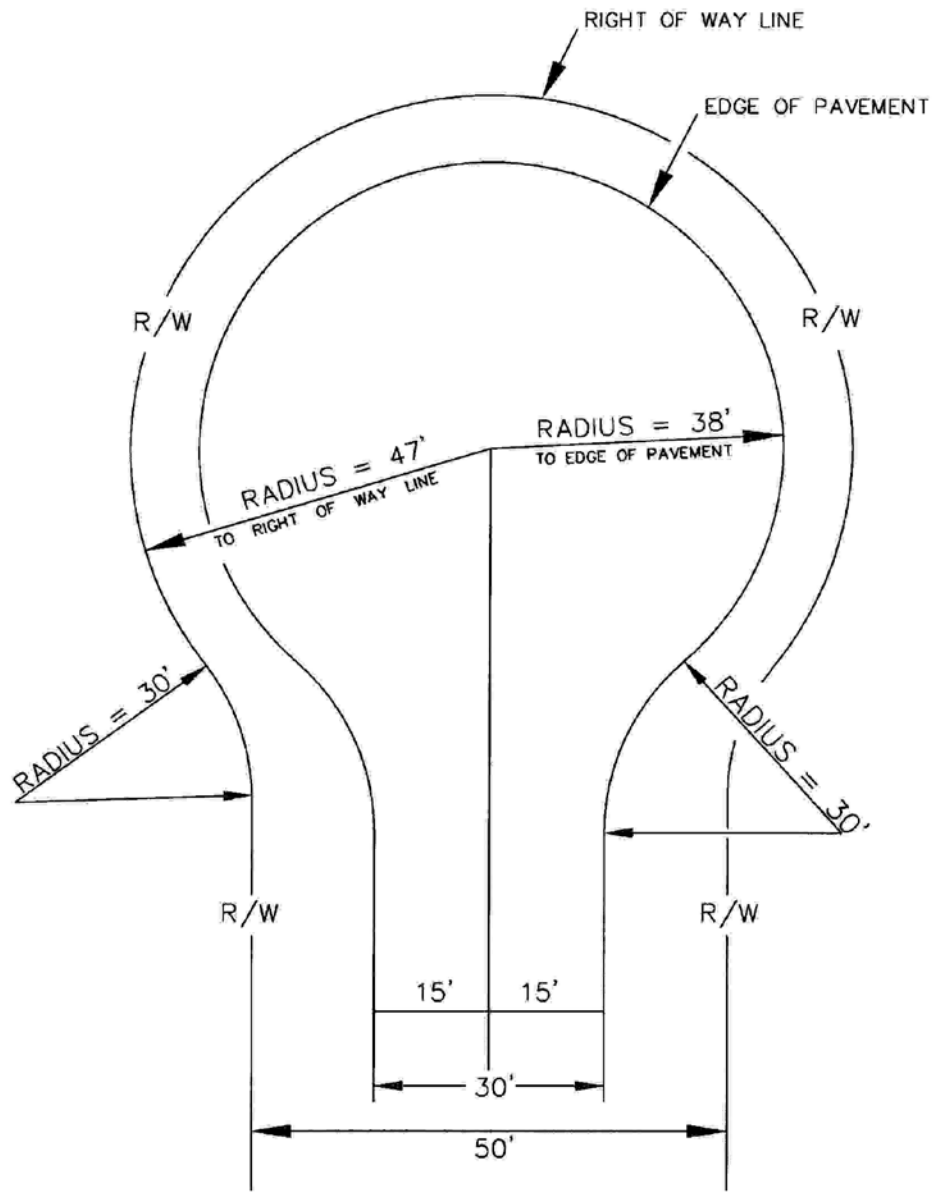

DWM Approved 02/19/02 Date Revisions	COUNTY OF BOONE MISSOURI PUBLIC WORKS	LOCAL ROAD WITH SHOULDERS TYPICAL CUL-DE-SAC	110.08

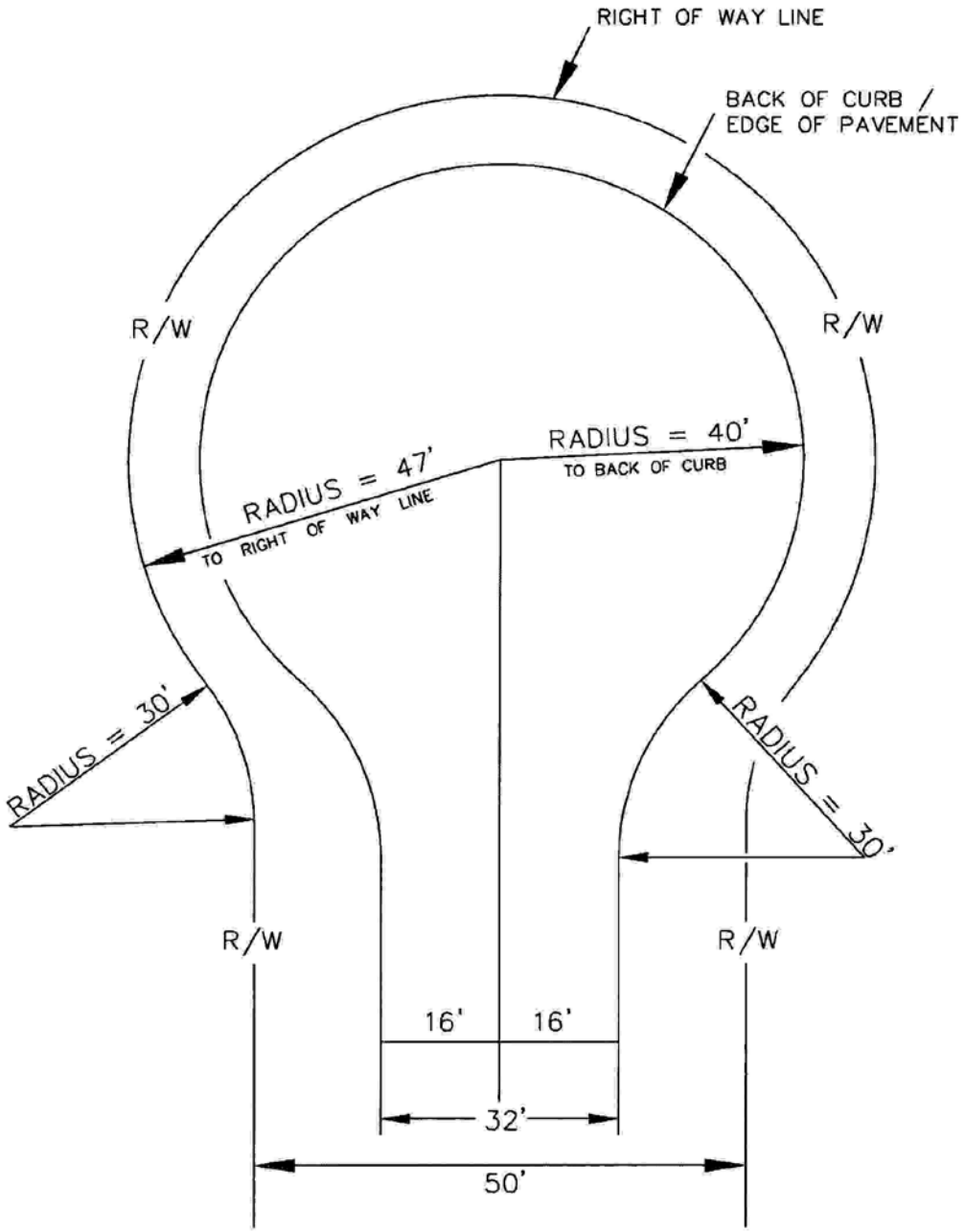

DWM Approved 02/19/02 Date	COUNTY OF BOONE MISSOURI PUBLIC WORKS	LOCAL ROAD WITH CURB AND GUTTER TYPICAL CUL-DE-SAC	110.09
Revisions			

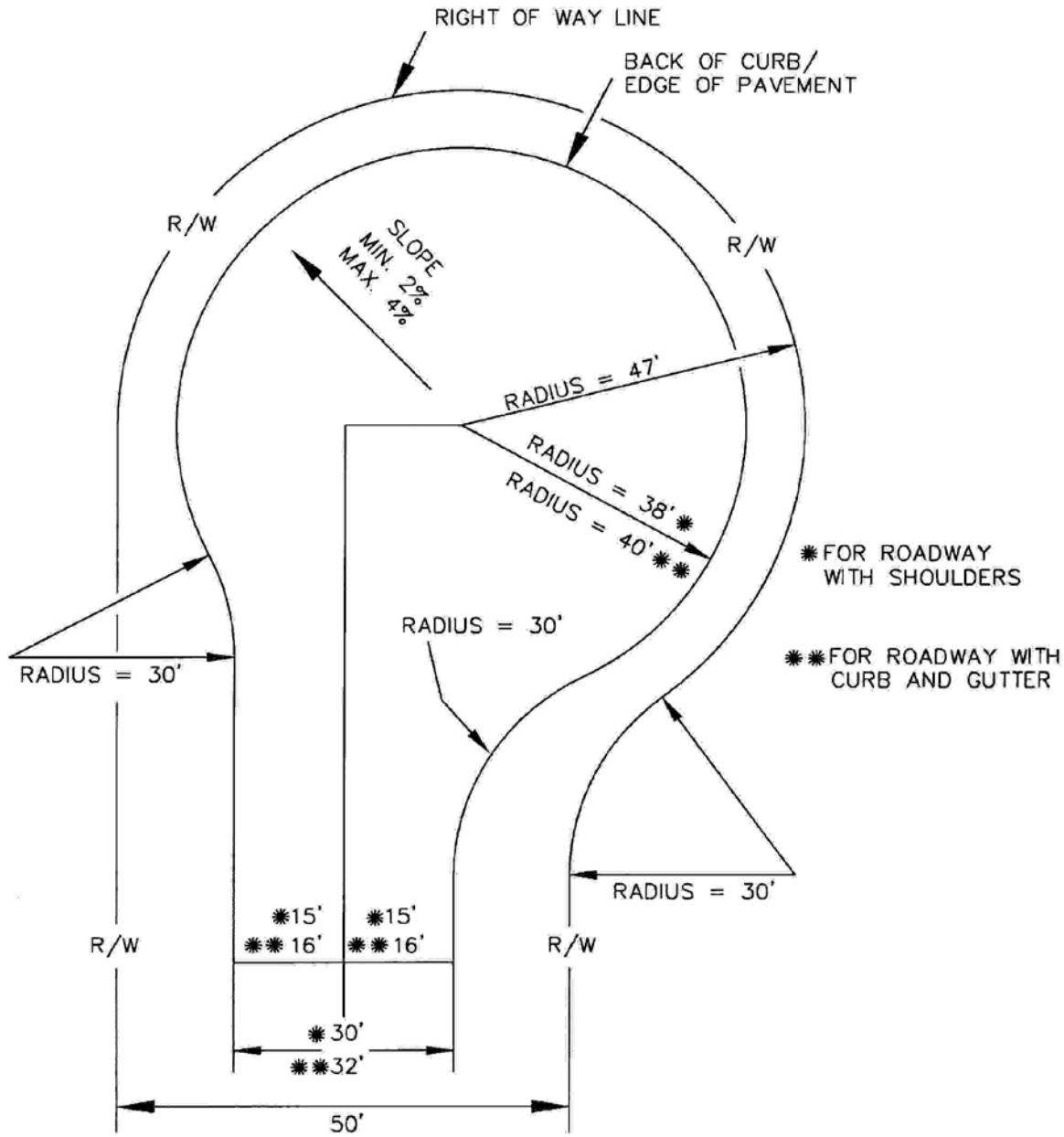

DWM 02/19/02 Approved Date Revisions	COUNTY OF BOONE MISSOURI PUBLIC WORKS	LOCAL ROAD TYPICAL OFFSET CUL-DE-SAC	110.11

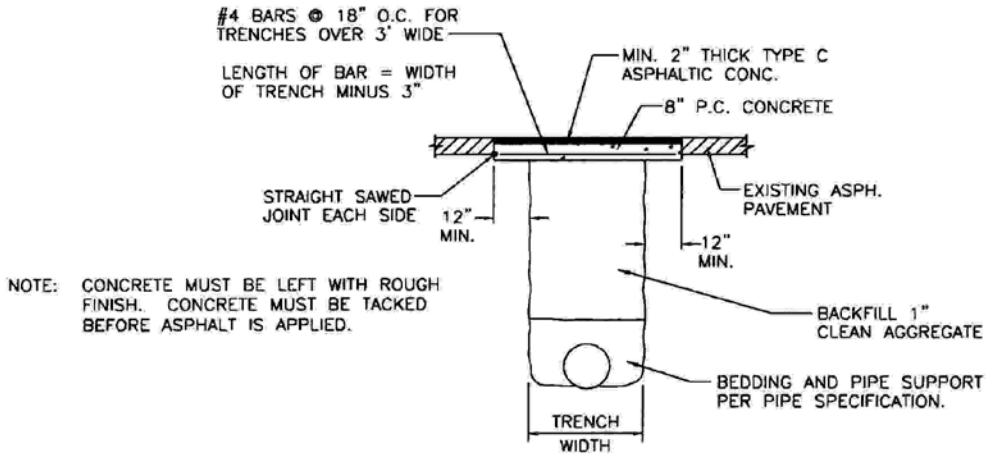

NOTE: CONCRETE MUST BE LEFT WITH ROUGH FINISH. CONCRETE MUST BE TACKED BEFORE ASPHALT IS APPLIED.

EXISTING ASPHALTIC PAVEMENT

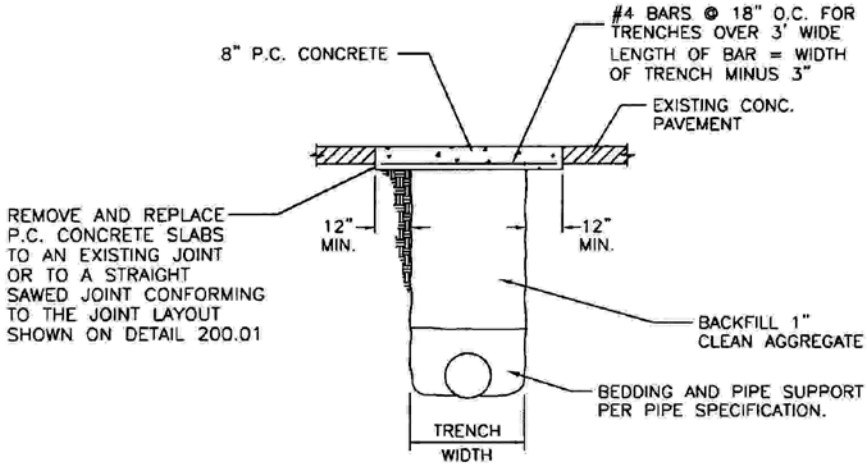

EXISTING CONCRETE PAVEMENT

NOTES:
1) IF THE DISTANCE FROM SAW-CUT TO ANY LONGITUDINAL OR TRANSVERSE JOINT OR CRACK IS LESS THAN 4', THE PAVEMENT SHALL BE REMOVED TO THAT TRANSVERSE JOINT OR CRACK.
2) CONCRETE SHALL BE CLASS AA.
3) HIGH/EARLY CONCRETE IS PERMITED WITH AUTHORIZATION.

Approved 02/19/02 Date Revisions	COUNTY OF BOONE MISSOURI PUBLIC WORKS	PATCHING PAVED STREETS	120.01

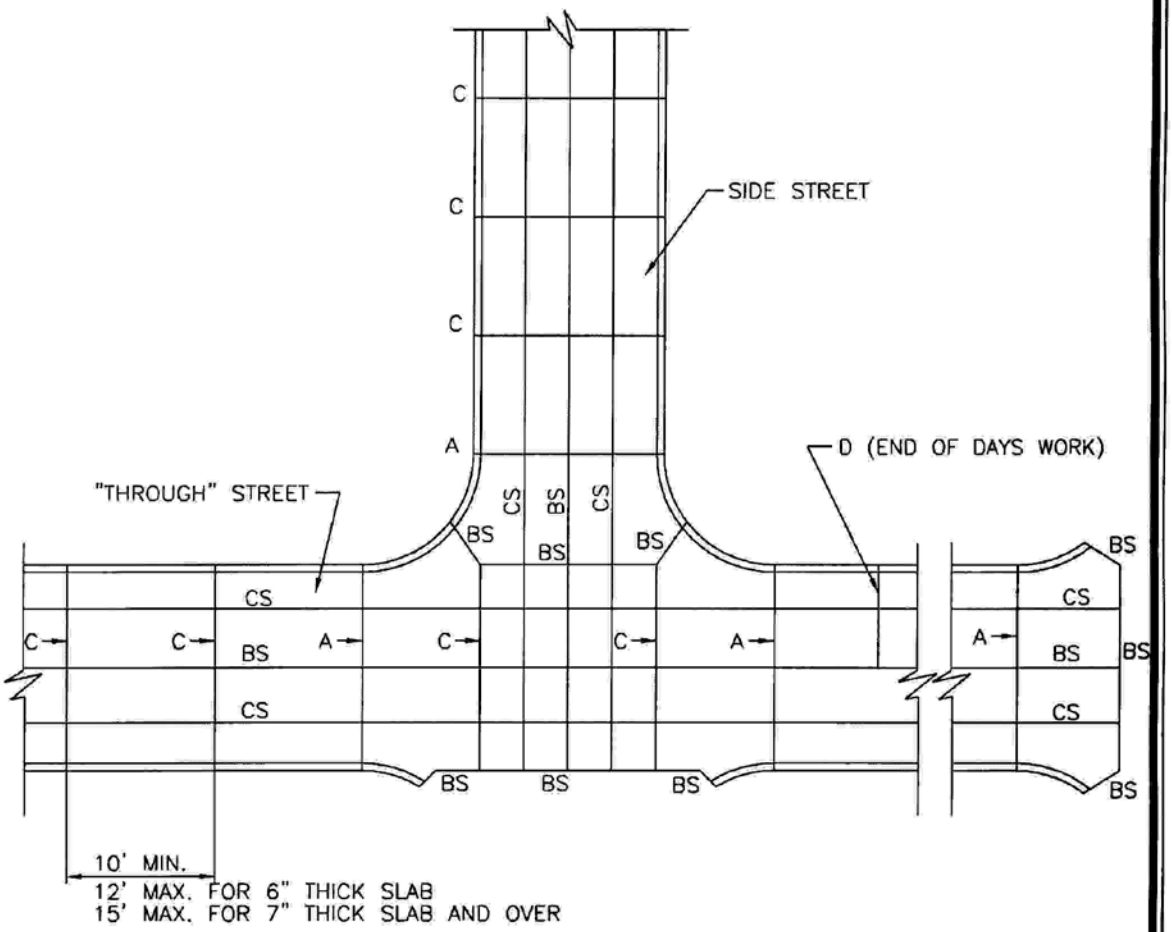

JOINT LOCATION PLAN

NOTE:

1. TRANSVERSE TYPE C JOINTS SHALL BE SAWED AS SOON AS CONCRETE CAN WITHSTAND RAVELING, JOINTS SHALL BE CLEANED AND FILLED WITH BITUMINOUS COMPOUND IMMEDIATELY FOLLOWING SAWING.
   NO TRAFFIC SHALL BE ALLOWED ON ROADWAY UNTIL JOINTS ARE SEALED.
2. INSTALL TYPE A EXPANSION JOINTS AT INTERSECTIONS, AND AT STRUCTURES.
3. INSTALL TYPE A EXPANSION JOINTS AT PC & PT OF CURVES. WITH DEFLECTION ANGLE OF GREATER THAN 30°.
4. INSTALL TYPE A EXPANSION JOINT AT BULB OF CUL-DE-SAC.
5. USE TYPE D JOINT AT END OF DAYS WORK.
6. ALL JOINTS TO BE FILLED PER SECTION A-1, 231.6.8

DWM 02/19/02 Approved Date Revisions	COUNTY OF BOONE MISSOURI PUBLIC WORKS	**JOINT DETAILS (P.C. Concrete Pavement)**	**200.01A**

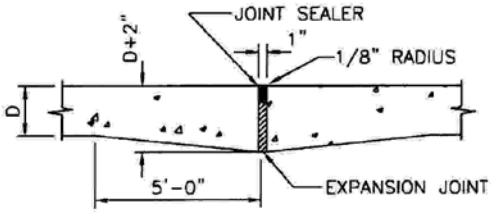

TYPE A
EXPANSION JOINT

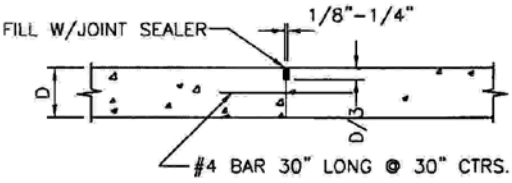

TYPE Ⓒ - CONSTRUCTED WITHOUT TIE BAR
TYPE ⓒⓢ - REQUIRES TIE BAR

TYPE C & CS
SAWED OR PREMOLDED STRIP

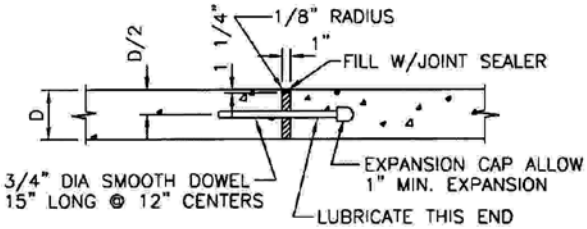

TYPE A - ALTERNATE
EXPANSION JOINT

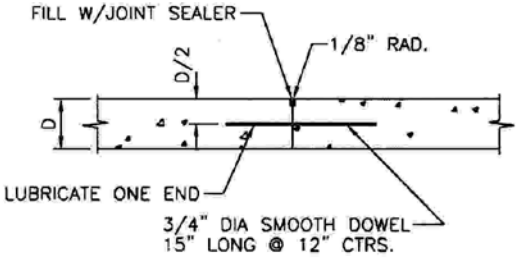

TYPE D
TRANSVERSE CONSTRUCTION JOINT

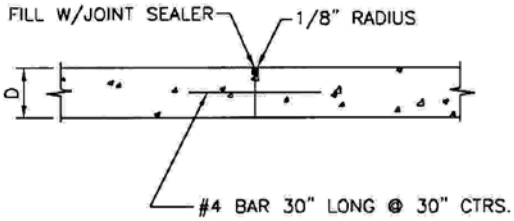

TYPE BS
KEYED CONSTRUCTION JOINT
(With Steel)

NOTE: JOINT SEALER - SEE SECTION 1-A, 231.6.8.

DWM 02/19/02 Approved Date Revisions	COUNTY OF BOONE MISSOURI PUBLIC WORKS	JOINT DETAILS (P.C. Concrete Pavement)	200.01B

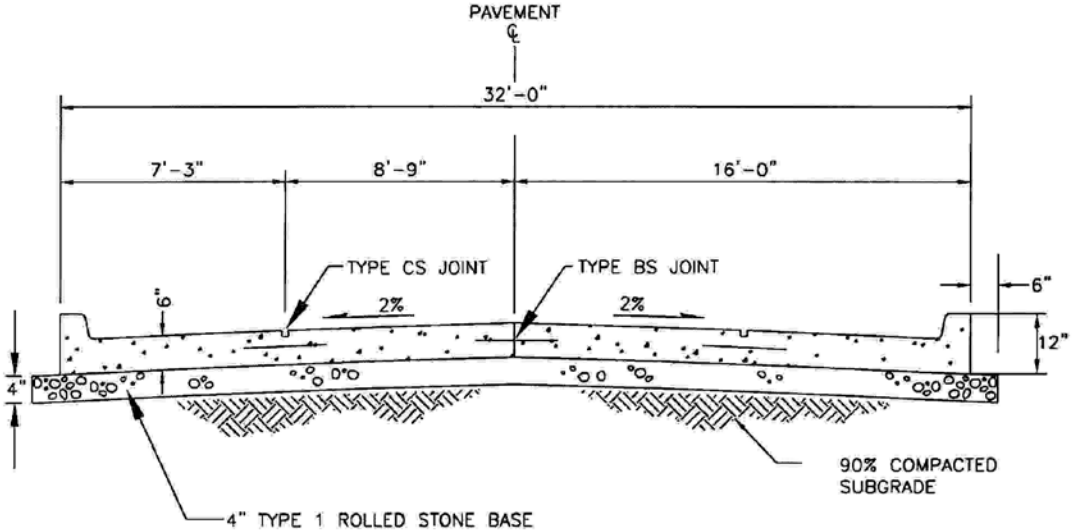

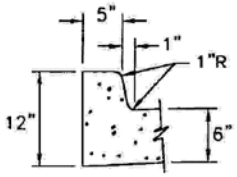

INTEGRAL CURB SECTION

ALTERNATE: SEE DRAWING 400.02

ROLLBACK CURB MAY BE USED. DESIGN ENGINEER SHALL PROVIDE CURB SECTION AND DESIGN STORMWATER IMPROVEMENTS TO MEET B.C.P.W. APPENDIX A. DESIGN ENGINEER MUST ALSO PROVIDE DESIGN FOR SIDEWALK RAMP CONNECTIONS WITH DETAILS.

NOTES:

1. ALL P.C. CONCRETE SHALL BE CLASS A.
2. SEE DETAIL 200.01A AND 200.01B FOR JOINT DETAILS.

DWM 02/19/02 Approved Date Revisions	COUNTY OF BOONE MISSOURI PUBLIC WORKS	LOCAL STREET (Concrete Pavement)	210.01

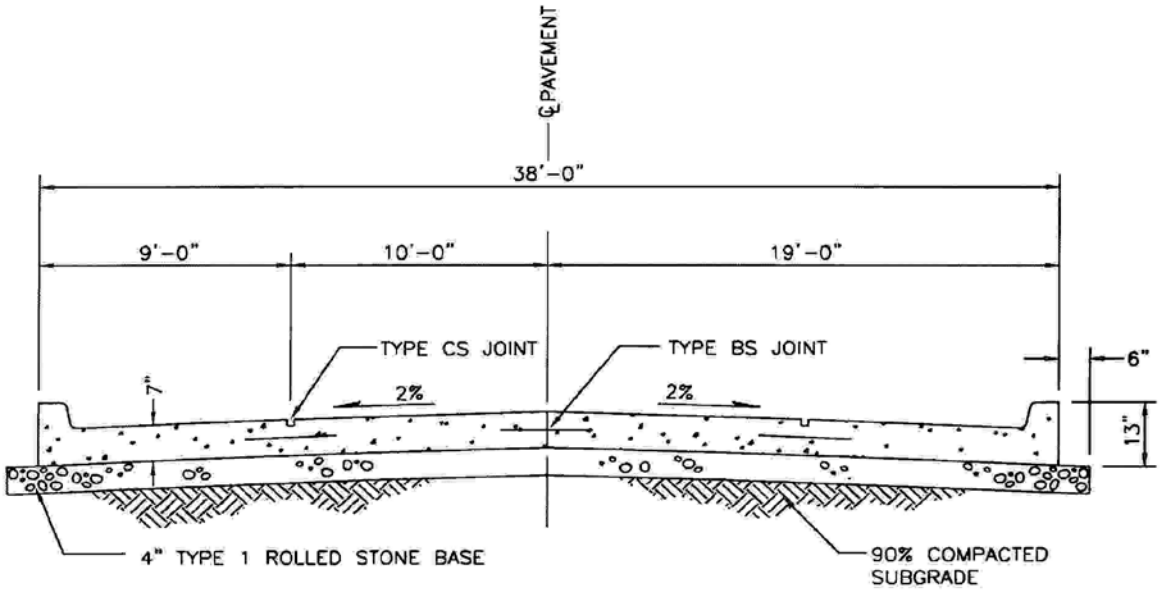

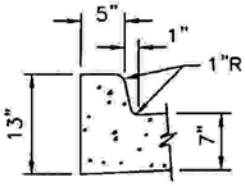

INTEGRAL CURB SECTION

NOTES:

1. ALL P.C. CONCRETE SHALL BE CLASS A.
2. SEE DETAIL 200.01A AND 200.01B FOR JOINT DETAILS.

DWM Approved 02/19/02 Date Revisions	COUNTY OF BOONE MISSOURI PUBLIC WORKS	COLLECTOR STREET (Concrete Pavement)	220.01

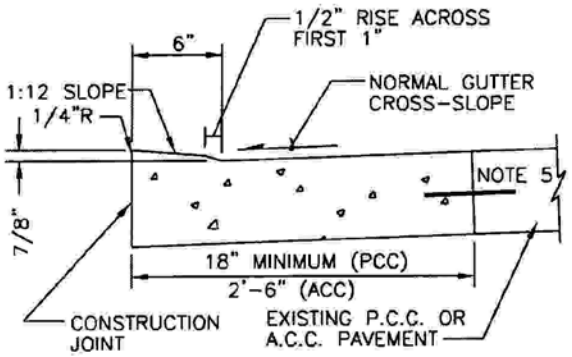

SIDEWALK RAMP CURB
(Alternate)

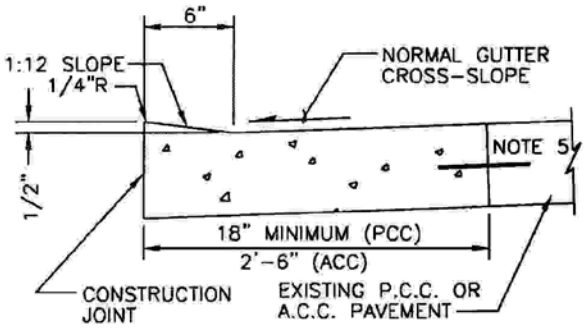

SIDEWALK RAMP CURB

PCC PAVEMENT NOTES:

1. CONCRETE SHALL BE CLASS A.
2. PAVEMENT THICKNESS SHALL MATCH EXISTING. BASE SHALL MATCH EXISTING
3. EXPANSION JOINTS AND CONTRACTION JOINTS SHALL BE PLACED AT LOCATIONS SIMILAR TO THE PAVEMENT WHICH WAS REMOVED.
4. CURB EDGE SHALL BE TOOLED WITH 1/4" RADIUS
5. WHERE EXISTING PAVEMENT IS P.C.C., LOW CURB REPLACEMENT SHALL BE DOWELLED INTO EXISTING. 12" LONG #4 BARS AT 24" CTR.

ACC PAVEMENT NOTES:

1. CONCRETE SHALL BE CLASS A.
2. GUTTER THICKNESS SHALL MATCH EXISTING, BASE SHALL MATCH EXISTING
3. EXPANSION JOINTS AND CONTRACTION JOINTS SHALL BE PLACED AT LOCATIONS SIMILAR TO THE CURB AND GUTTER WHICH WAS REMOVED.
4. CURB EDGE SHALL BE TOOLED WITH 1/4" RADIUS

Approved 02/19/02 Date Revisions	COUNTY OF BOONE MISSOURI PUBLIC WORKS	CURB DETAILS (Sidewalk Ramp)	400.01

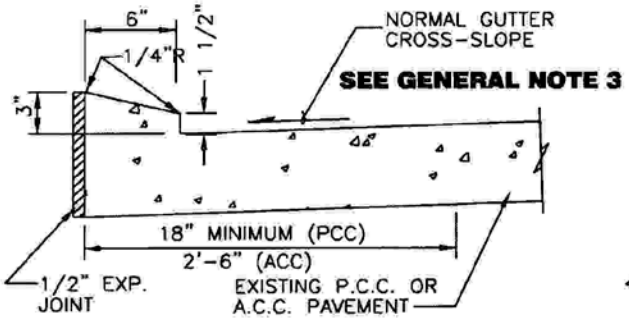

RESIDENTIAL DRIVEWAY CURB

MAXIMUM RISE (PREFERRED)

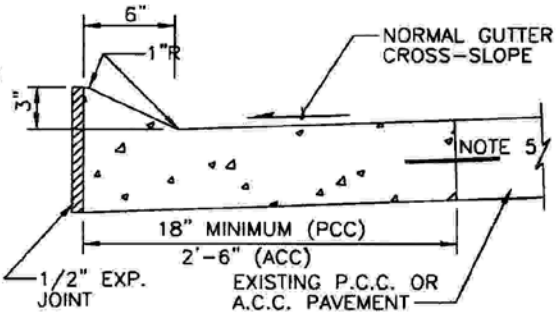

RESIDENTIAL DRIVEWAY CURB

MAXIMUM RISE (ALTERNATE)

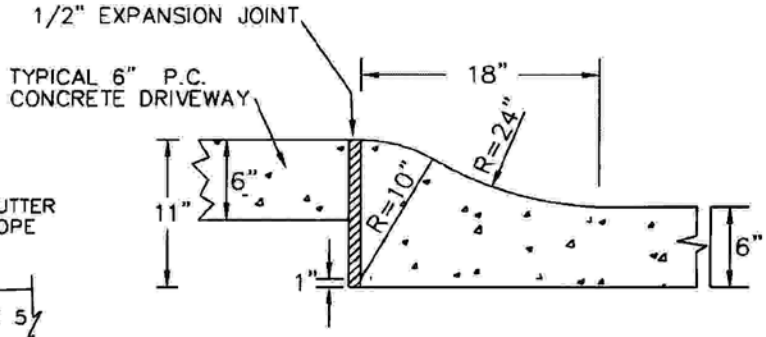

ROLLBACK CURB ALTERNATIVE

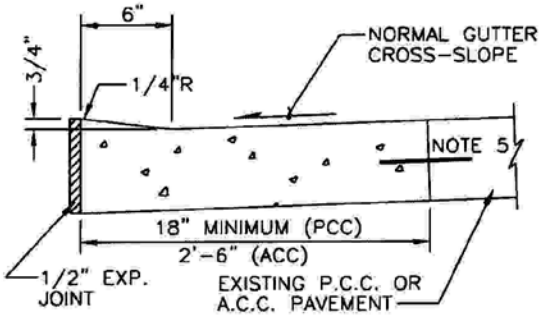

RESIDENTIAL DRIVEWAY CURB

MINIMUM RISE

GENERAL NOTES:

1. ELEVATION OF DRIVEWAY AT R.O.W. LINE REQUIRED TO BE A MINIMUM OF 8 1/4" ABOVE GUTTER ELEVATION. VERIFY R.O.W. WIDTH AND ALLOWABLE DRIVEWAY SLOPES PRIOR TO CONSTRUCTING MINIMUM RISE DRIVEWAY CURB.

2. ALTERNATE CURB PROFILES WHICH FALL WITHIN THE MINIMUM RISE AND MAXIMUM RISE CURBS SHOWN WILL BE APPROVED. SLOPE ACROSS RESIDENTIAL DRIVEWAY CURB TOP MUST BE AT LEAST 1/2" IN 6" TOWARD THE STREET.

3. FOR RESIDENTIAL DRIVEWAYS, HORIZONTAL SAWING OF CURB IS REQUIRED. HORIZONTAL SAWING NOT ALLOWED ON NEW CONSTRUCTION WHERE DRIVEWAYS ARE IDENTIFIED. HORIZONTAL SAWING MACHINES AND METHOD REQUIRES PRIOR APPROVAL.

PCC / ACC PAVEMENT NOTES:

1. CONCRETE SHALL BE CLASS A.
2. PAVEMENT THICKNESS SHALL MATCH EXISTING. BASE SHALL MATCH EXISTING
3. EXPANSION JOINTS AND CONTRACTION JOINTS SHALL BE PLACED AT LOCATIONS SIMILAR TO THE PAVEMENT WHICH WAS REMOVED.
4. CURB EDGE SHALL BE TOOLED WITH 1/4" RADIUS
5. WHERE EXISTING PAVEMENT IS P.C.C., LOW CURB REPLACEMENT SHALL BE DOWELLED INTO EXISTING. 12" LONG #4 BARS AT 24" CTR.

Approved 02/19/02 Date	COUNTY OF BOONE MISSOURI PUBLIC WORKS	CURB DETAILS (Residential Driveway)	400.02
Revisions			

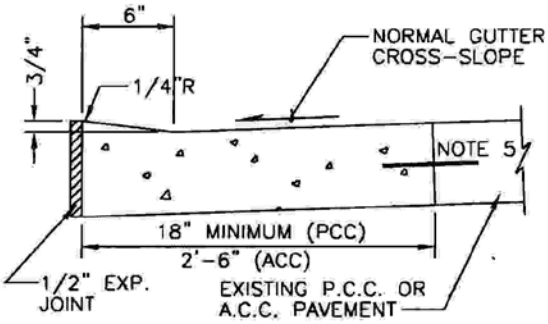

COMMERCIAL DRIVEWAY CURB

PCC PAVEMENT NOTES:

1. CONCRETE SHALL BE CLASS A.
2. PAVEMENT THICKNESS SHALL MATCH EXISTING. BASE SHALL MATCH EXISTING
3. EXPANSION JOINTS AND CONTRACTION JOINTS SHALL BE PLACED AT LOCATIONS SIMILAR TO THE PAVEMENT WHICH WAS REMOVED.
4. CURB EDGE SHALL BE TOOLED WITH 1/4" RADIUS
5. WHERE EXISTING PAVEMENT IS P.C.C., LOW CURB REPLACEMENT SHALL BE DOWELLED INTO EXISTING. 12" LONG #4 BARS AT 24" CTR.

ACC PAVEMENT NOTES:

1. CONCRETE SHALL BE CLASS A.
2. GUTTER THICKNESS SHALL MATCH EXISTING, BASE SHALL MATCH EXISTING
3. EXPANSION JOINTS AND CONTRACTION JOINTS SHALL BE PLACED AT LOCATIONS SIMILAR TO THE CURB AND GUTTER WHICH WAS REMOVED.
4. CURB EDGE SHALL BE TOOLED WITH 1/4" RADIUS

Approved 02/19/02 Date Revisions	COUNTY OF BOONE MISSOURI PUBLIC WORKS	CURB DETAILS (Commercial Driveway)	400.03

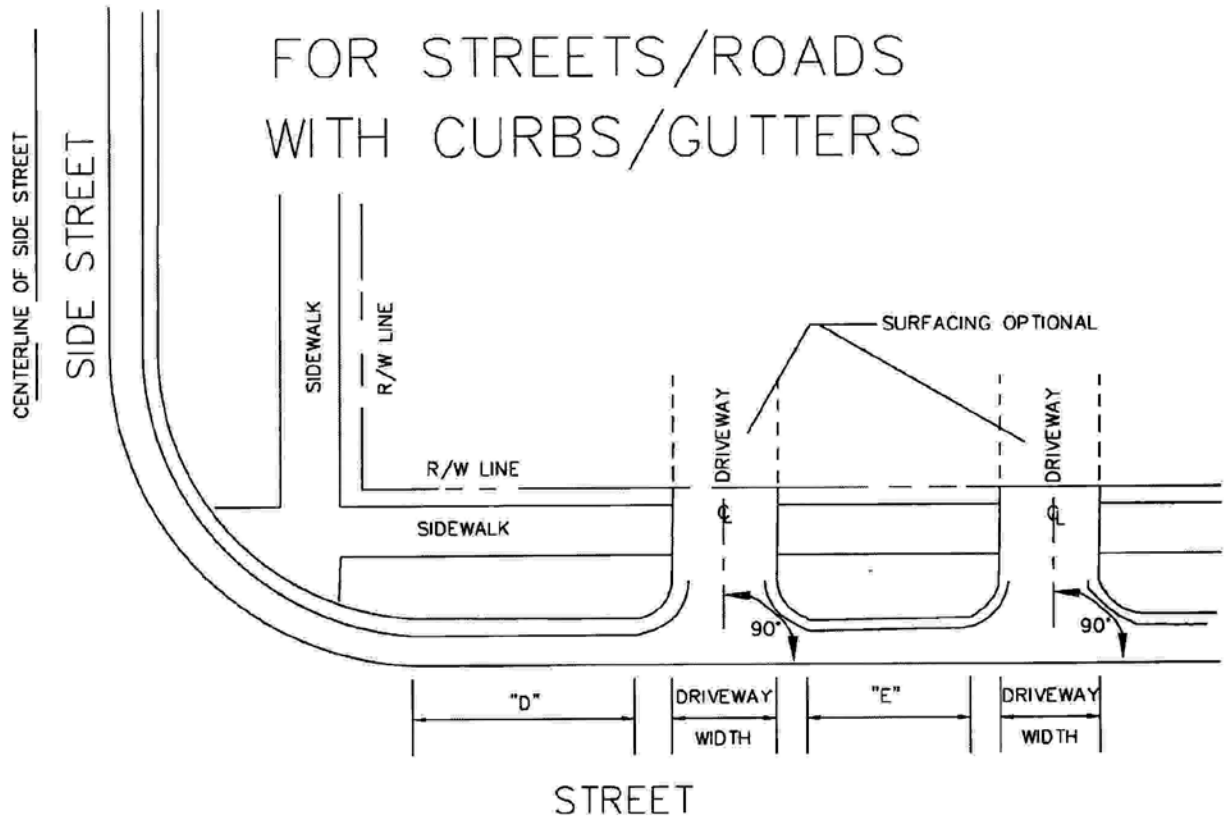

TYPE OF STREET	MINIMUM DISTANCES *		DRIVEWAY WIDTH	
	"D"	"E"	MIN.	MAX.
LOCAL	30'	10'	30'	10'
COLLECTOR	150'	50'	30'	10'
ARTERIAL	400'	150'	30'	10'
COMMERCIAL/INDUSTRIAL	150'	150'	20'	40'

* MINIMUM DISTANCES MEASURED FROM POINT OF CURVATURE TO POINT OF CURVATURE

DRIVEWAY LOCATIONS & DIMENSIONS

NTS

DWM 02/19/02
Approved Date

Revisions

COUNTY OF BOONE MISSOURI
PUBLIC WORKS

FOR STREETS W/CURBS
Driveway Location and Dimensions

410.01A

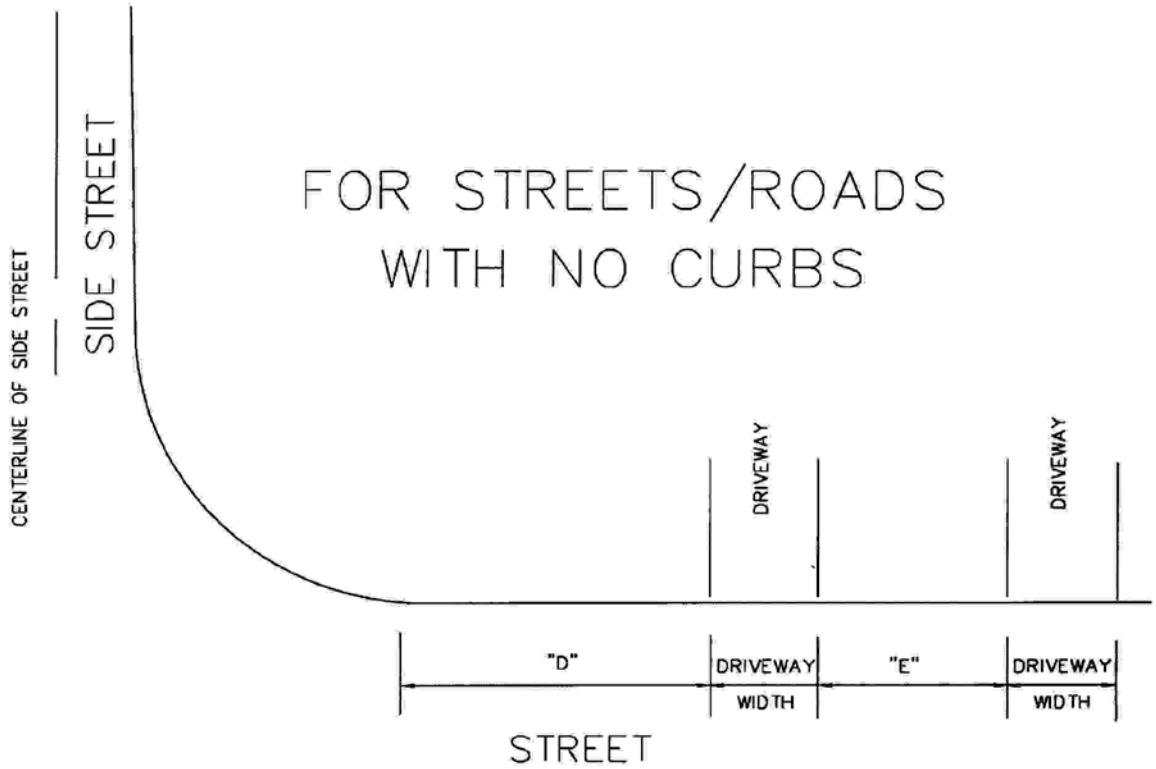

TYPE OF STREET	MINIMUM DISTANCES *		DRIVEWAY WIDTH	
	"D"	"E"	MIN.	MAX.
LOCAL	30'	10'	30'	10'
COLLECTOR	150'	50'	30'	10'
ARTERIAL	400'	150'	30'	10'
COMMERCIAL/INDUSTRIAL	150'	150'	20'	40'

* MINIMUM DISTANCES MEASURED FROM POINT OF CURVATURE TO POINT OF CURVATURE

DRIVEWAY LOCATIONS & DIMENSIONS

NTS

Approved 02/19/02 Date

Revisions

COUNTY OF BOONE MISSOURI PUBLIC WORKS

FOR STREETS W/O CURBS
Driveway Location and Dimensions

410.01B

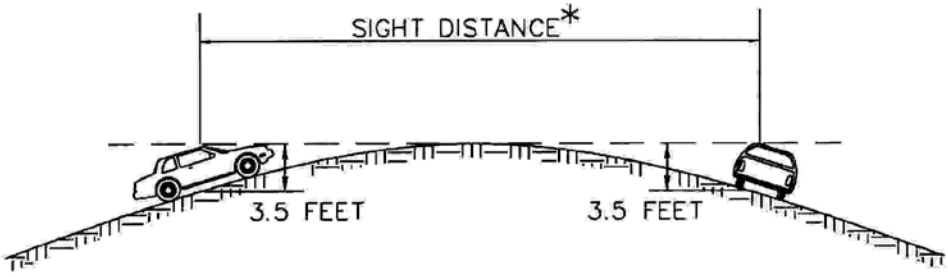

VERTICAL STOPPING DISTANCE

* **NOTE: SEE APPENDIX B, 1.5 FOR SIGHT DISTANCE REQUIREMENTS**

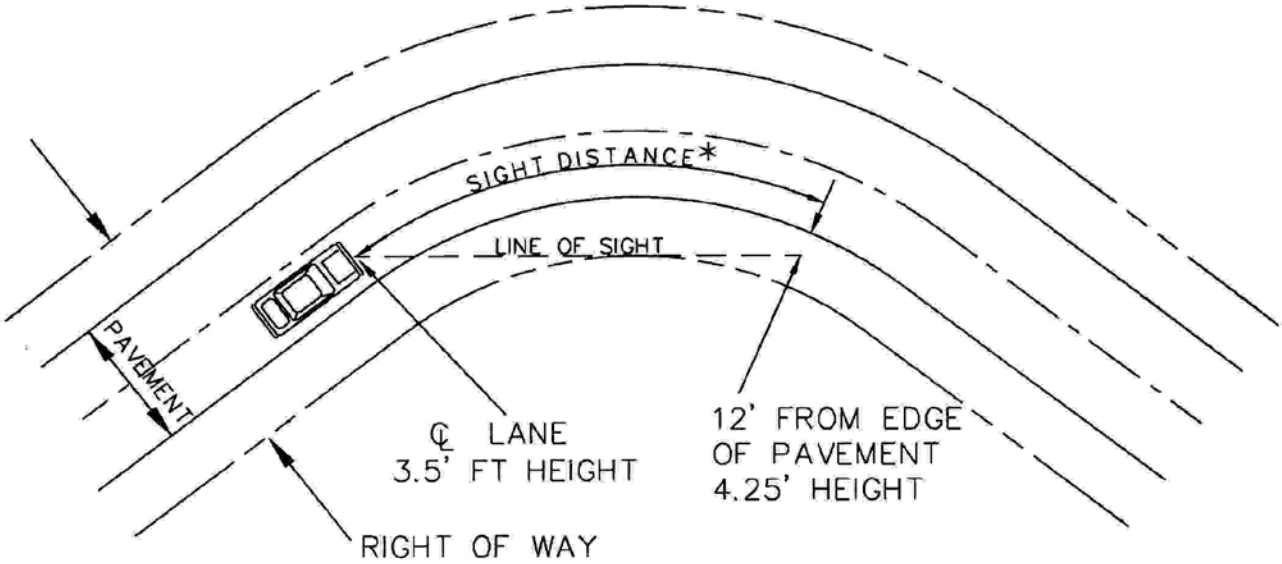

HORIZONTAL STOPPING DISTANCE

Approved 02/19/02 Date	COUNTY OF BOONE MISSOURI PUBLIC WORKS	SIGHT DISTANCE DIAGRAM	410.01C
Revisions			

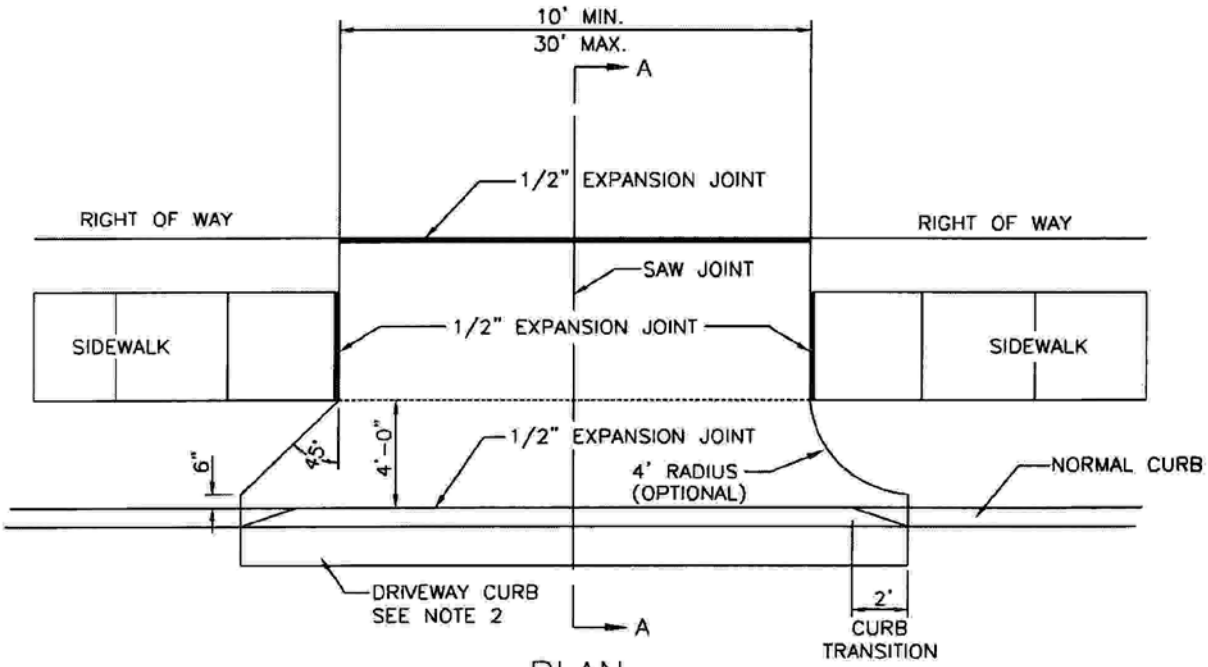

PLAN

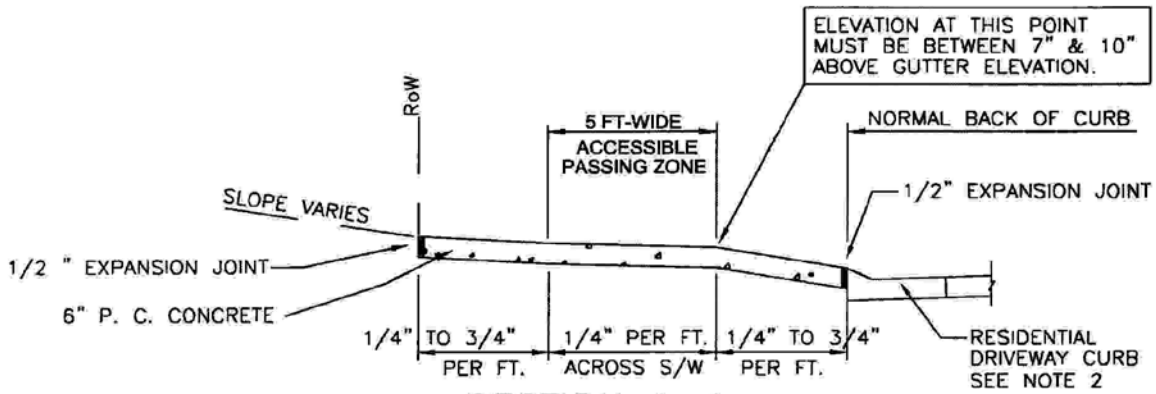

SECTION A–A

NOTES:

1. DRIVEWAY APPROACH SHALL BE 6" CLASS A CONCRETE.
2. **RECOMMEND CURB CUT** OR REPLACE STANDARD CURB & GUTTER SECTION WITH DRIVEWAY CURB SECTION. SEE DETAIL 400.02. IF ROLLBACK CURB OPTION IS USED, CURB DOES NOT HAVE TO BE REMOVED. PLACE 1/2" EXPANSION JOINT BETWEEN CURB AND DRIVEWAY APPROACH.
3. EXPANSION JOINT SHALL BE 1/2" PREFORMED CORK OR BITUMINOUS EXPANSION JOINT MATERIAL.
4. ALL DRIVEWAY APPROACHES SHALL SLOPE TOWARD THE STREET.
5. ALL DRIVEWAY APPROACHES SHALL BE CONSTRUCTED TO ACCOMODATE SIDEWALKS. (EXISTING AND FUTURE) STANDARD SIDEWALK LOCATION IS 1 FT INSIDE RIGHT OF WAY LINE.
6. DRIVEWAY APPROACH SHALL PROVIDE A MINIMUM 5' WIDE ACCESSIBLE SIDEWALK PASSING ZONE.
7. DRIVEWAY SLOPE ACROSS ACCESSIBLE SIDEWALK PASSING ZONE IS 1/4" PER FT.
8. MINIMIZE SIDEWALK WARPING ADJACENT TO DRIVEWAY APPROACH.
9. DRIVEWAY SLOPE WITHIN RIGHT OF WAY SHALL NOT EXCEED 3/4" PER FOOT.
10. ALL JOINTS SHALL BE CLEANED AND SEALED PER SECTION A–1, 231.6.8.

Approved 02/19/02 Date Revisions	COUNTY OF BOONE MISSOURI PUBLIC WORKS	DRIVEWAY (Residential with Curb and Gutter)	410.02

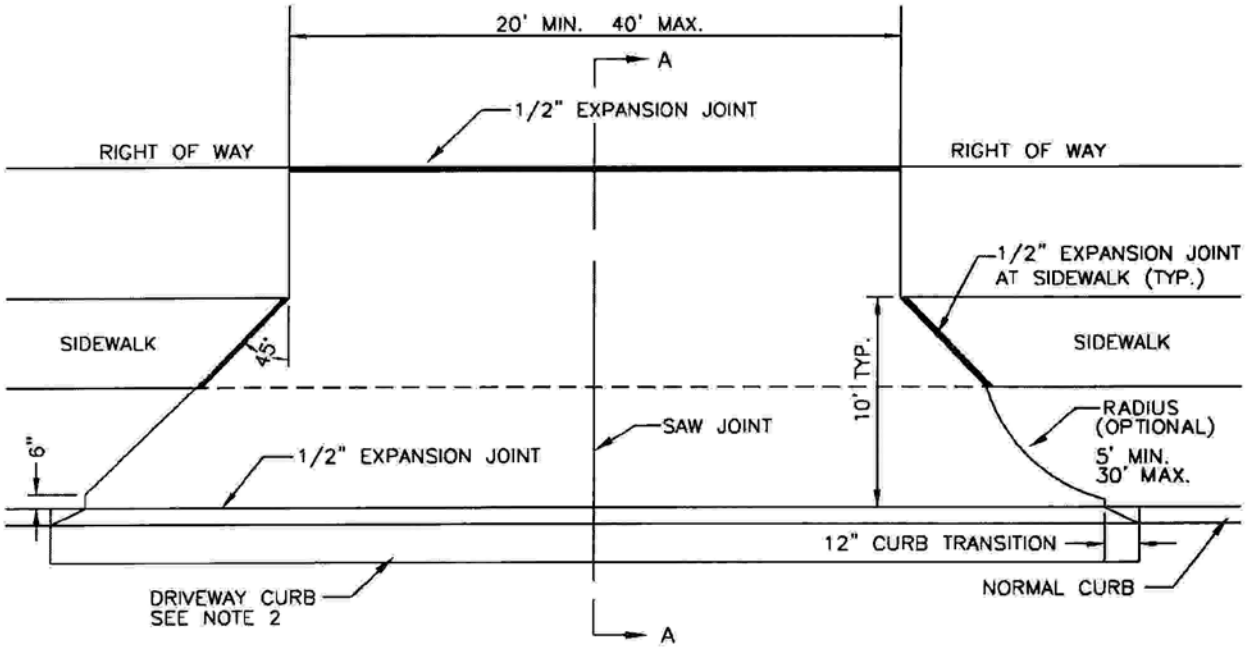

PLAN

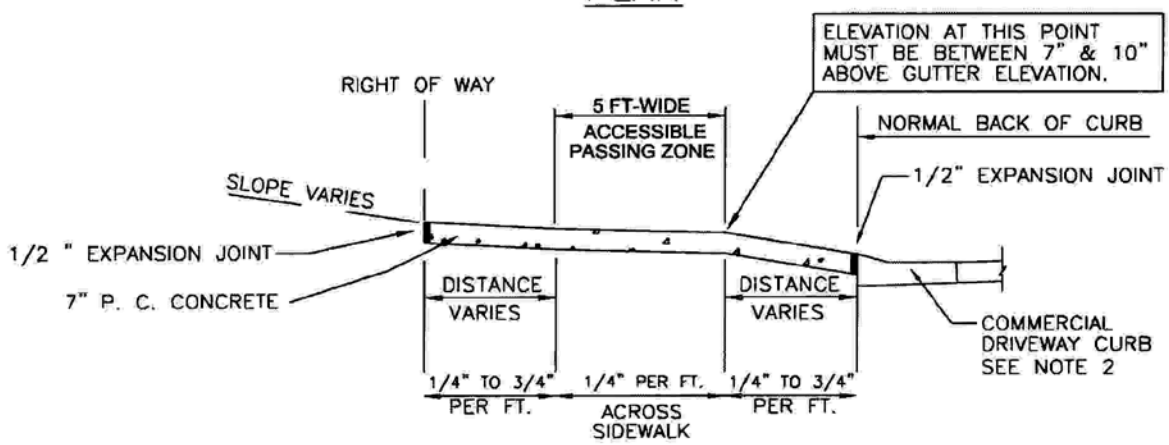

SECTION A–A

NOTES:

1. DRIVEWAY APPROACH SHALL BE 7" THICK CLASS A CONCRETE.
2. REPLACE STANDARD CURB & GUTTER SECTION WITH DRIVEWAY CURB SECTION. SEE DETAIL 400.03.
3. EXPANSION JOINT SHALL BE 1/2" PREFORMED CORK OR BITUMINOUS EXPANSION JOINT MATERIAL.
4. ALL DRIVEWAY APPROACHES SHALL SLOPE TOWARD THE STREET.
5. ALL DRIVEWAY APPROACHES SHALL BE CONSTRUCTED TO ACCOMODATE SIDEWALKS. (EXISTING AND FUTURE) STANDARD SIDEWALK LOCATION IS 1 FOOT OFF OF RIGHT OF WAY LINE.
6. DRIVEWAY APPROACH SHALL PROVIDE A MINIMUM 5' WIDE ACCESSIBLE SIDEWALK PASSING ZONE.
7. DRIVEWAY SLOPE ACROSS ACCESSIBLE SIDEWALK PASSING ZONE IS 1/4" PER FT.
8. MINIMIZE SIDEWALK WARPING ADJACENT TO DRIVEWAY APPROACH.
9. DRIVEWAY SLOPE WITHIN RIGHT OF WAY SHALL NOT EXCEED 3/4" PER FOOT.

DWM Approved	02/19/02 Date	COUNTY OF BOONE MISSOURI PUBLIC WORKS	DRIVEWAY (Commercial)	410.03
Revisions				

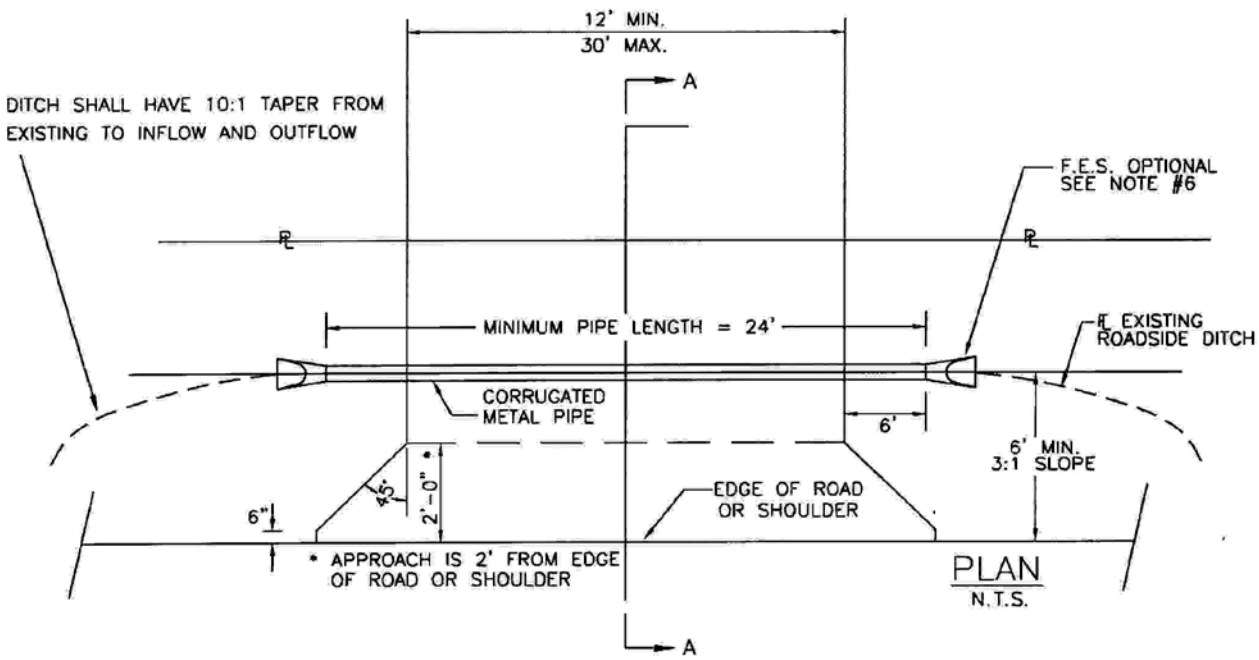

PLAN
N.T.S.

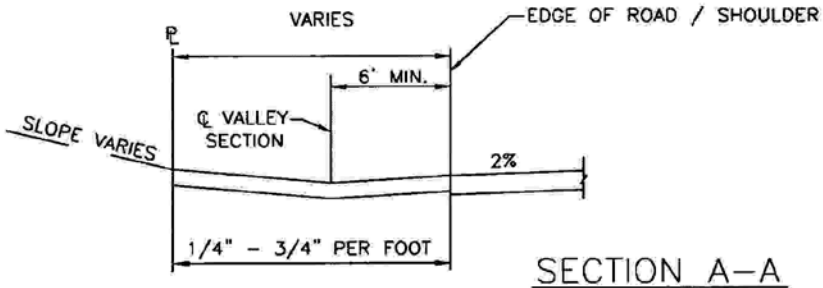

SECTION A–A
N.T.S.

NOTES:

1. MINIMUM APPROACH ON A HARD SURFACED ROADWAY SHALL BE 2' FROM EDGE OF SHOULDER OR TRAVELED ROADWAY.
2. APPROACH SHALL BE A COMMERCIAL GRADE ASPHALT HOT MIX EQUAL TO DEPTH OF SHOULDER OR ROADWAY, OR A MINIMUM OF 5", WHICHEVER IS GREATER.
3. A 6" THICK CLASS A P.C. CONCRETE APPROACH CAN BE USED ONLY WHEN CONNECTED TO A CONCRETE ROADWAY OR SHOULDER.
4. VALLEY SECTION IS REQUIRED. VALLEY SHALL BE A MINIMUM OF 6' FROM EDGE OF ROADWAY OR SHOULDER
5. PIPE UNDER DRIVEWAY SHALL BE SIZED TO CARRY 10 YEAR STORM, MINIMUM 15" DIAMETER. SEE APPENDIX B, 1.1.
6. PIPE LENGTHS SHALL BE BASED ON 3:1 SLOPES. USE OF FLARED END SECTIONS (FES) ARE AT OWNER'S DISCRETION. NOTE: FES WILL NOT BE REPLACED BY BCPW SHOULD THEY BECOME DAMAGED OR NON-FUNCTIONAL.
7. MINIMUM DITCH DEPTH SHALL BE 24".
8. CMP SHALL BE ANNULAR RIVETED AND GALVANIZED OR POLYMERIC COATED. SEE APPENDIX A, SECTION 260.3.5

ALTERNATE METHOD-

WHERE THE ROADSIDE DITCH DRAINS LESS THAN 10,000 SQ. FT. , THE PIPE CAN BE OMITTED. VALLEY SECTION MUST BE INCREASED TO A DEPTH OF 6" AND PAVEMENT SECTION MUST COVER FROM EDGE OF ROADWAY TO 4' PAST THE LOW POINT OF THE VALLEY. PAVEMENT TYPE, OTHER THAN THE 2' APPROACH IS AT OWNER'S DISCRETION.

Approved 02/19/02 Date	COUNTY OF BOONE MISSOURI PUBLIC WORKS	DRIVEWAY Non-Curb and Guttered	410.04
Revisions			

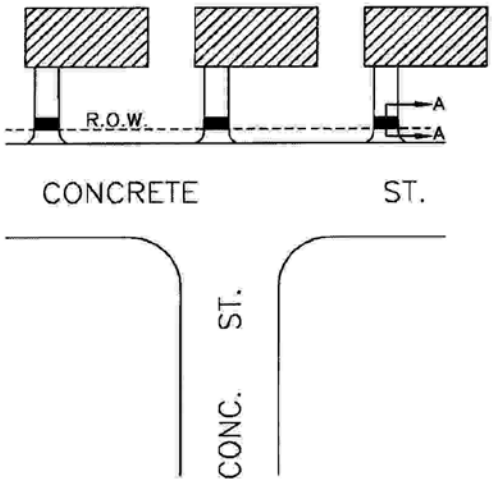

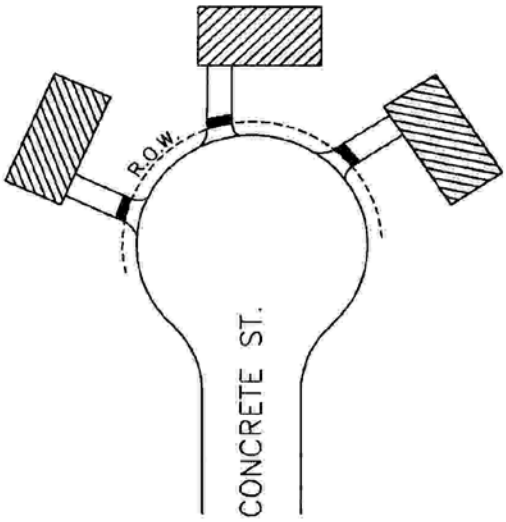

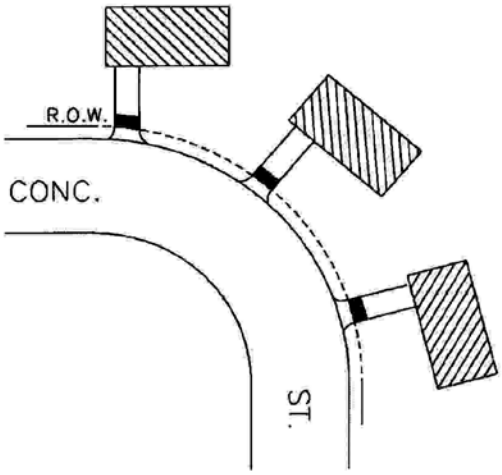

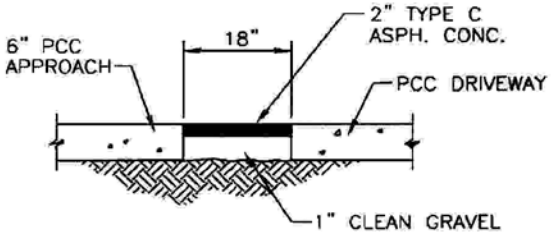

SECTION A–A

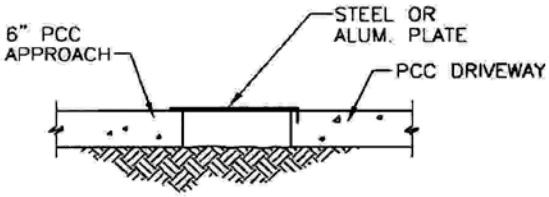

alt. SECTION A–A

THE MOVEMENT OVER TIME OF CONCRETE STREETS DUE PRIMARILY TO THE THERMAL EXPANSION AND CONTRACTION PROPERTIES OF CONCRETE HAS CAUSED DAMAGE TO PRIVATE RESIDENCES IN SOME NEW SUB-DIVISIONS IN BOONE COUNTY WHERE CONCRETE STREETS ARE USED.

IN ORDER TO CONTROL SUCH DAMAGE, THE COUNTY IS RECOMMENDING THE USE OF ONE OF THE JOINT DETAILS ABOVE WHEN THE DRIVEWAY IS LOCATED AS DEPICTED ON THIS DRAWING.

BOONE COUNTY SHALL NOT BE LIABLE FOR ANY DAMAGE THAT MAY OCCUR TO ANY STRUCTURE DUE TO NON-COMPLIANCE WITH THIS RECOMENDATION. A WAIVER MUST BE SIGNED BY OWNER BEFORE DRIVEWAY WILL BE APPROVED. A FEE IN THE AMOUNT TO RECORD A 1 (ONE) PAGE DOCUMENT PAYABLE TO THE RECORDER OF DEEDS WILL BE REQUIRED.

Approved 02/19/02 Date Revisions	COUNTY OF BOONE MISSOURI PUBLIC WORKS	**ALTERNATE EXPANSION JOINTS FOR DRIVEWAYS ON P.C.C. STREETS**	**410.05**

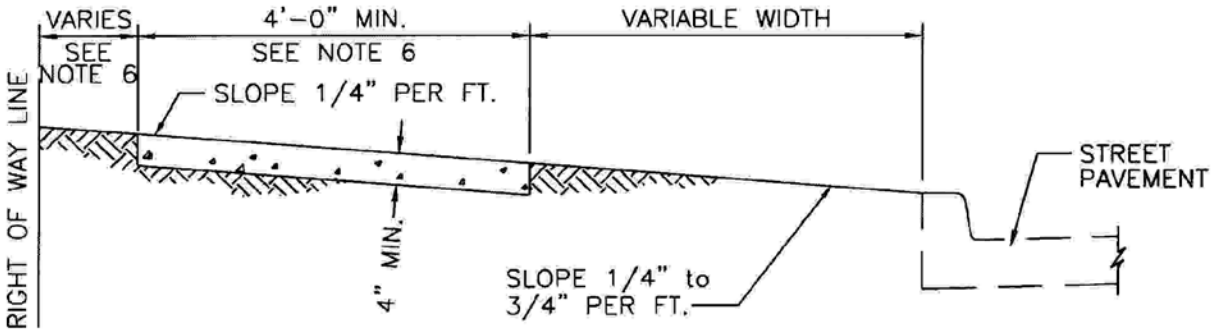

SIDEWALK WITH GRASS PARKWAY

NOTE:

1. SIDEWALK SHALL BE 4" THICK CLASS A CONCRETE.
2. INSTALL 1/2" EXPANSION JOINTS AT INTERSECTIONS, RAMPS, STRUCTURES, AND DRIVEWAY APPROACHES.
3. INSTALL TRANSVERSE SAW JOINTS AT SPACING = SIDEWALK WIDTH.
4. FOR SIDEWALKS WIDER THAN 6 FT, INSTALL LONGITUDINAL SAW JOINT AT ℄, TRANSVERSE SAW JOINT SPACING = 1/2 SIDEWALK WIDTH.
5. FOR SIDEWALKS LESS THAN 5'-0" WIDE, INSTALL A 60" BY 60" PASSING SPACE AT 200 FT MAXIMUM INTERVALS. DRIVEWAYS, RAMP LANDINGS AND INTERSECTING SIDEWALKS WHICH PROVIDE THE REQUIRED AREA QUALIFY AS PASSING SPACE. CROSS SLOPE OF PASSING SPACE CAN NOT EXCEED 1/4" PER FT.
6. STANDARD SIDEWALK PLACEMENT IS 12" FROM RIGHT OF WAY LINE.
7. SIDEWALK WIDTH FOR COLLECTOR STREETS AND ARTERIAL STREETS IS 5'-0".

Approved 02/19/02 Date	COUNTY OF BOONE MISSOURI PUBLIC WORKS	SIDEWALK	420.01
Revisions			

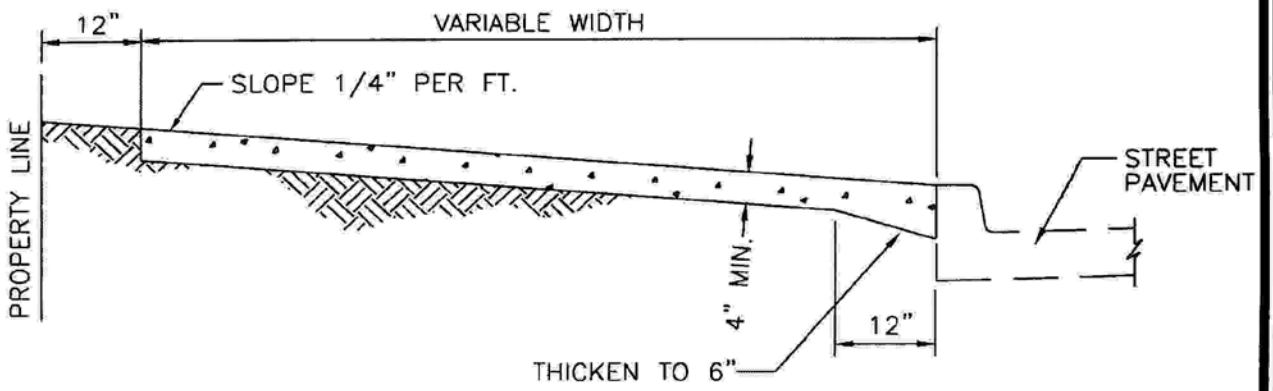

NOTE:

1. SIDEWALK SHALL BE 4" THICK CLASS A CONCRETE.
2. INSTALL 1/2" TRANSVERSE EXPANSION JOINTS TO MATCH STREET OR CURB AND GUTTER EXPANSION JOINTS AND AT ALL DRIVEWAY APPROACHES, AND SIDEWALK RAMPS.
3. INSTALL TRANSVERSE SAW JOINTS AT SPACING = SIDEWALK WIDTH.
4. FOR SIDEWALKS WIDER THAN 6 FT., INSTALL LONGITUDINAL SAW JOINT AT ℄, TRANSVERSE SAW JOINT SPACING = SIDEWALK WIDTH.
5. FOR SIDEWALKS LESS THAN 5'-0" WIDE, INSTALL A 60" BY 60" PASSING SPACE AT 200 FT MAXIMUM INTERVALS. DRIVEWAYS, RAMP LANDINGS AND INTERSECTING SIDEWALKS WHICH PROVIDE THE REQUIRED AREA QUALIFY AS PASSING SPACE. CROSS SLOPE OF PASSING SPACE CAN NOT EXCEED 1/4" PER FT.

Approved 02/19/02 Date	COUNTY OF BOONE MISSOURI PUBLIC WORKS	SIDEWALK AT BACK OF CURB	420.02
Revisions			

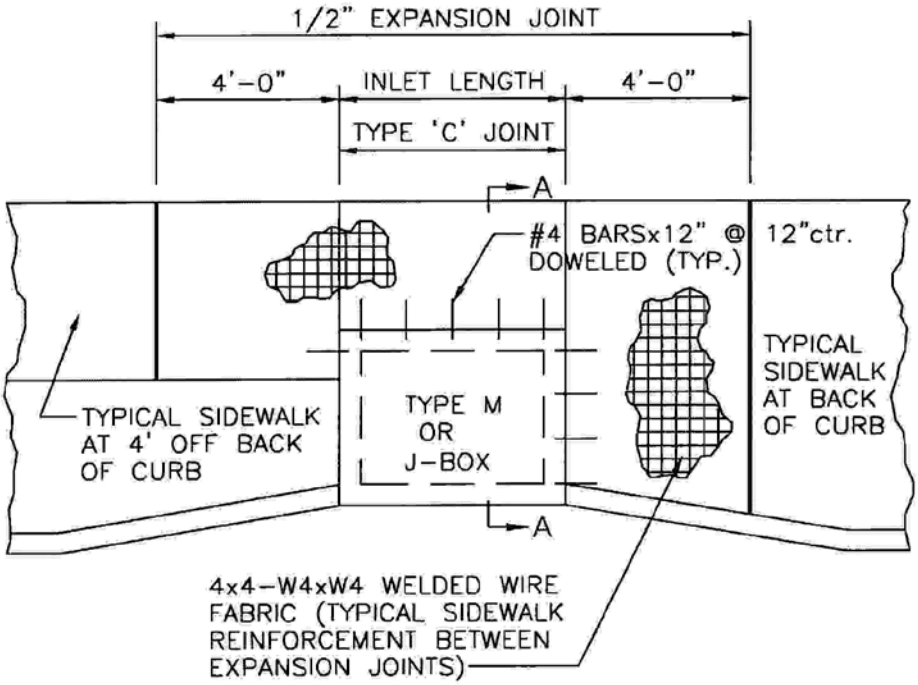

PLAN VIEW

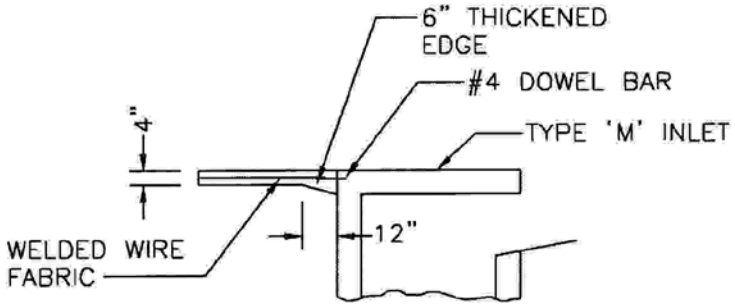

SECTION A-A

NOTES:

1. SIDEWALK SHALL BE 4" THICK CLASS A CONCRETE
2. REINFORCING STEEL SHALL BE GRADE 60

DWM Approved 02/19/02 Date Revisions	COUNTY OF BOONE MISSOURI PUBLIC WORKS	SIDEWALK REINFORCEMENT AT DRAINAGE STRUCTURE	420.03

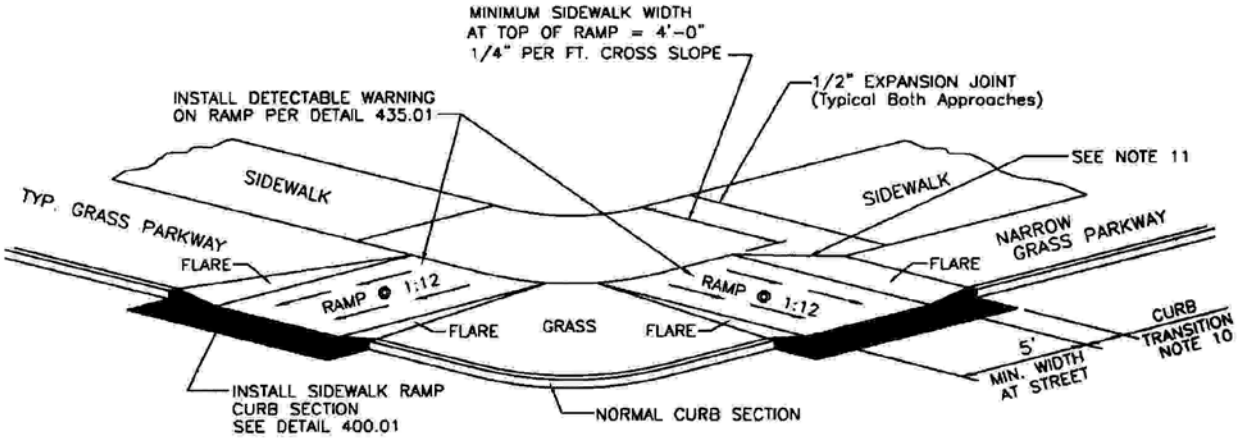

NOTE:

1. RAMP SHALL BE 4" THICK CLASS A CONCRETE.
2. EXPANSION JOINT SHALL BE 1/2" PREFORMED CORK OR BITUMINOUS EXPANSION JOINT MATERIAL.
3. MAXIMUM RAMP CROSS SLOPE IS 1/4" PER FT.
4. ALL SLOPES ARE MEASURED FROM THE HORIZONTAL.
5. REPLACE STANDARD CURB SECTION WITH SIDEWALK RAMP CURB SECTION – DETAIL 400.01
6. RAMP LENGTH IS DEPENDENT ON 1:12 MAX. SLOPE. USE FLATTER WHEN POSSIBLE.
7. LANDING AREA AT TOP OF RAMP SHALL BE 4'-0" MIN WIDTH, CROSS SLOPE OF LANDING SHALL NOT EXCEED 1/4" PER FT., INCREASE SIDEWALK RADIUS TO OBTAIN MINIMUM 4'-0" LANDING.
8. TYPE "A" RAMP NOT APPLICABLE IF SIDEWALK AND PARKWAY WIDTH DOES NOT PROVIDE 4'-0" LANDING AT TOP OF RAMP.
9. FLARES ARE REQUIRED AT RAMPS TO KEEP GRASS PARKWAY SLOPES IN CONFORMANCE WITH THE TYPICAL CROSS SECTION.
10. CURB TRANSITION LENGTH IS DEPENDENT ON FLARE SLOPE
11. IF RAMP EXTENDS INTO NORMAL SIDEWALK, FLARE SLOPE MUST NOT EXCEED 1:10. A LANDING IS REQUIRED, SEE NOTE 7.

Approved 02/19/02 Date	COUNTY OF BOONE MISSOURI PUBLIC WORKS	SIDEWALK RAMP Sidewalk with Grass Parkway (Type A)	430.01
Revisions			

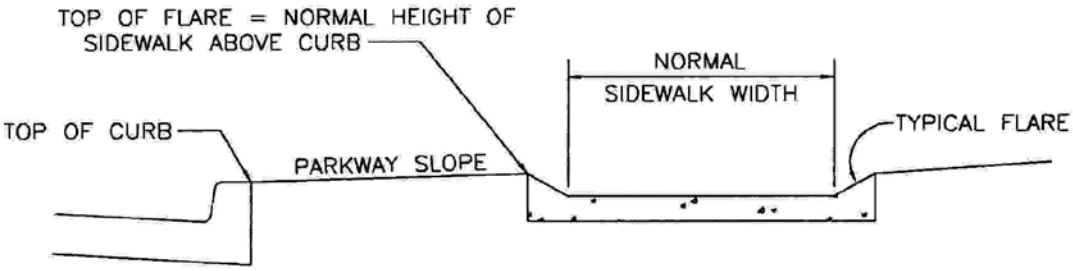

SECTION A–A

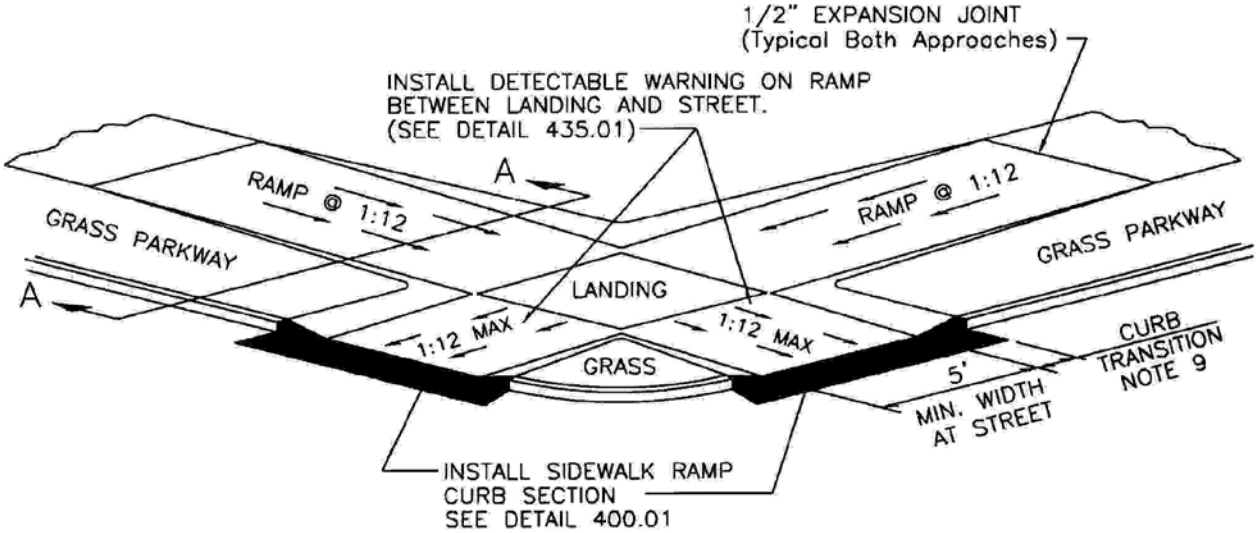

NOTE:

1. RAMP SHALL BE 4" THICK CLASS A CONCRETE.
2. EXPANSION JOINT SHALL BE 1/2" PREFORMED CORK OR BITUMINOUS EXPANSION JOINT MATERIAL.
3. MAXIMUM RAMP CROSS SLOPE IS 1/4" PER FT.
4. ALL SLOPES ARE MEASURED FROM THE HORIZONTAL.
5. REPLACE STANDARD CURB SECTION WITH SIDEWALK RAMP CURB SECTION – DETAIL 400.01
6. RAMP 1:12 MAX. USE FLATTER WHEN POSSIBLE.
7. LANDING AREA SHALL BE 4'–0" MIN WIDTH, CROSS SLOPE OF LANDING SHALL NOT EXCEED 1/4" PER FT.
8. FLARES ARE REQUIRED AT RAMPS TO KEEP GRASS PARKWAY SLOPES IN CONFORMANCE WITH THE TYPICAL CROSS SECTION. (SEE SECTION A–A)
9. CURB TRANSITION LENGTH IS DEPENDENT ON FLARE SLOPE

AWM Approved	02/19/02 Date	COUNTY OF BOONE MISSOURI PUBLIC WORKS	SIDEWALK RAMP Sidewalk with Grass Parkway (Type B)	430.02
Revisions				

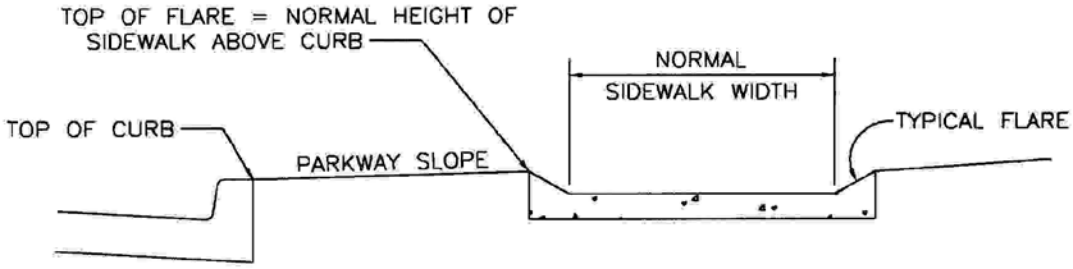

SECTION A–A

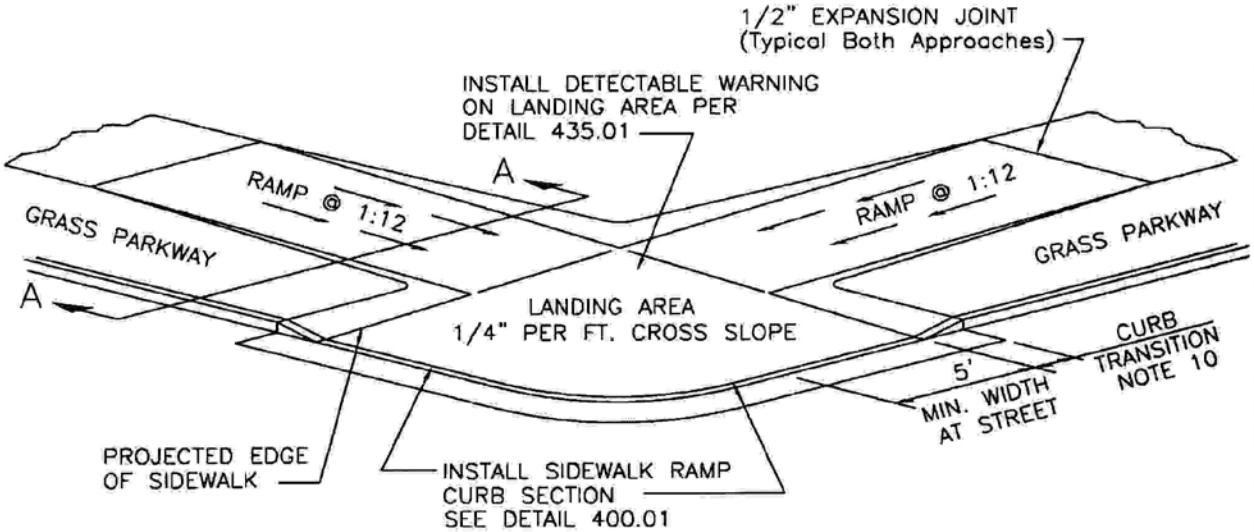

NOTE:

1. RAMP SHALL BE 4" THICK CLASS A CONCRETE.
2. EXPANSION JOINT SHALL BE 1/2" PREFORMED CORK OR BITUMINOUS EXPANSION JOINT MATERIAL.
3. MAXIMUM RAMP CROSS SLOPE IS 1/4" PER FT.
4. ALL SLOPES ARE MEASURED FROM THE HORIZONTAL.
5. REPLACE STANDARD CURB SECTION WITH SIDEWALK RAMP CURB SECTION – DETAIL 400.01
6. RAMP LENGTH IS DEPENDENT ON 1:12 MAX. SLOPE. USE FLATTER WHEN POSSIBLE.
7. LANDING AREA SHALL BE 4'–0" MIN WIDTH, CROSS SLOPE OF LANDING SHALL NOT EXCEED 1/4" PER FT.
8. USE TYPE "C" RAMP ONLY IF TYPE "A" & "B" ARE NOT FEASIBLE.
9. FLARES ARE REQUIRED AT RAMPS TO KEEP GRASS PARKWAY SLOPES IN CONFORMANCE WITH THE TYPICAL CROSS SECTION. (SEE SECTION A–A)
10. CURB TRANSITION LENGTH IS DEPENDENT ON FLARE SLOPE

Approved 02/19/02 Date Revisions	COUNTY OF BOONE MISSOURI PUBLIC WORKS	SIDEWALK RAMP Sidewalk with Grass Parkway (Type C)	430.03

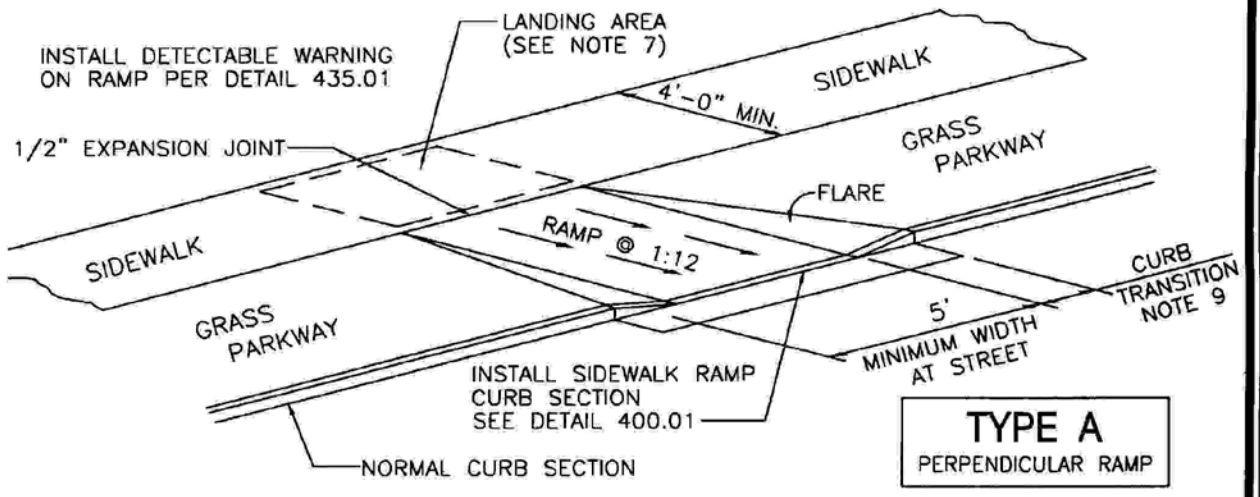

TYPE A
PERPENDICULAR RAMP

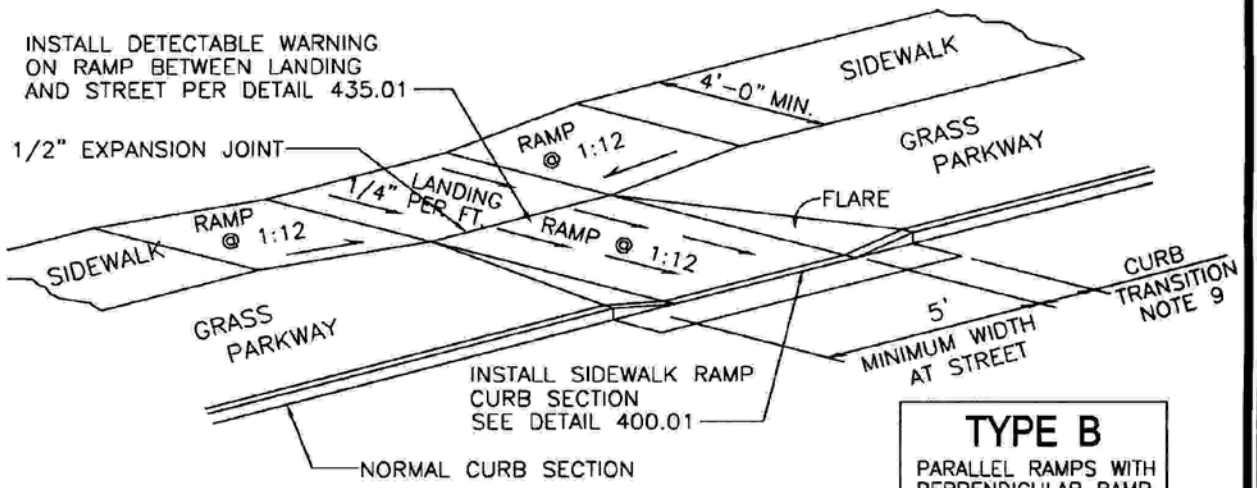

TYPE B
PARALLEL RAMPS WITH PERPENDICULAR RAMP

NOTE:

1. RAMP SHALL BE 4" THICK CLASS A CONCRETE.
2. EXPANSION JOINT SHALL BE 1/2" PREFORMED CORK OR BITUMINOUS EXPANSION JOINT MATERIAL.
3. ALL SLOPES ARE MEASURED FROM THE HORIZONTAL.
4. REPLACE STANDARD CURB SECTION WITH SIDEWALK RAMP CURB SECTION – DETAIL 400.01
5. RAMP LENGTH IS DEPENDENT ON 1:12 MAX. SLOPE. USE FLATTER WHEN POSSIBLE.
6. LANDING AREA AT TOP OF RAMP SHALL BE 4'-0" MIN WIDTH, CROSS SLOPE OF LANDING SHALL NOT EXCEED 1/4" PER FT.
7. TYPE "A" RAMP NOT APPLICABLE IF PARKWAY WIDTH DOES NOT PROVIDE ENOUGH LENGTH FOR PERPENDICULAR RAMP AT 1:12 SLOPE.
8. FLARES ARE REQUIRED AT RAMPS TO KEEP GRASS PARKWAY SLOPES IN CONFORMANCE WITH THE TYPICAL CROSS SECTION.
9. CURB TRANSITION LENGTH IS DEPENDENT ON FLARE SLOPE.

Approved 02/19/02 Date Revisions	COUNTY OF BOONE MISSOURI PUBLIC WORKS	**MIDBLOCK SIDEWALK RAMP** **Sidewalk with Grass Parkway**	**431.01**

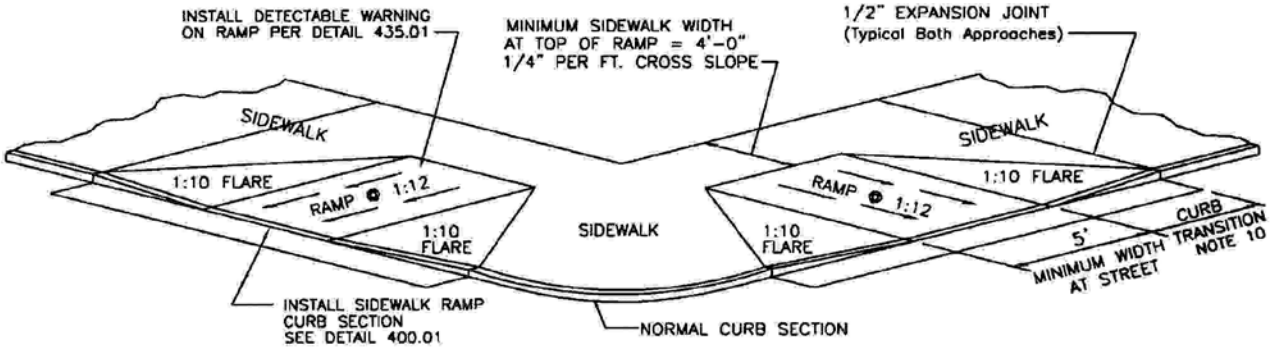

NOTE:

1. RAMP SHALL BE 4" THICK CLASS A CONCRETE.
2. EXPANSION JOINT SHALL BE 1/2" PREFORMED CORK OR BITUMINOUS EXPANSION JOINT MATERIAL.
3. MAXIMUM RAMP CROSS SLOPE IS 1/4" PER FT.
4. ALL SLOPES ARE MEASURED FROM THE HORIZONTAL.
5. REPLACE STANDARD CURB SECTION WITH SIDEWALK RAMP CURB SECTION – DETAIL 400.01
6. RAMP LENGTH IS DEPENDENT ON 1:12 MAX. SLOPE. USE FLATTER WHEN POSSIBLE.
7. LANDING AREA AT TOP OF RAMP SHALL BE 4'-0" MIN WIDTH, CROSS SLOPE OF LANDING SHALL NOT EXCEED 1/4" PER FT.
8. TYPE "A" RAMP NOT APPLICABLE IF SIDEWALK WIDTH DOES NOT PROVIDE 4'-0" LANDING AT THE TOP OF RAMP. USE TYPE "B" RAMP.
9. RAMP EXTENDS INTO SIDEWALK, FLARE SLOPE MUST NOT EXCEED 1:10.
10. CURB TRANSITION LENGTH IS DEPENDENT ON 1:10 FLARE SLOPE

Approved 02/19/02 Date	COUNTY OF BOONE MISSOURI PUBLIC WORKS	SIDEWALK RAMP Sidewalk at Back of Curb (Type A)	432.01
Revisions			

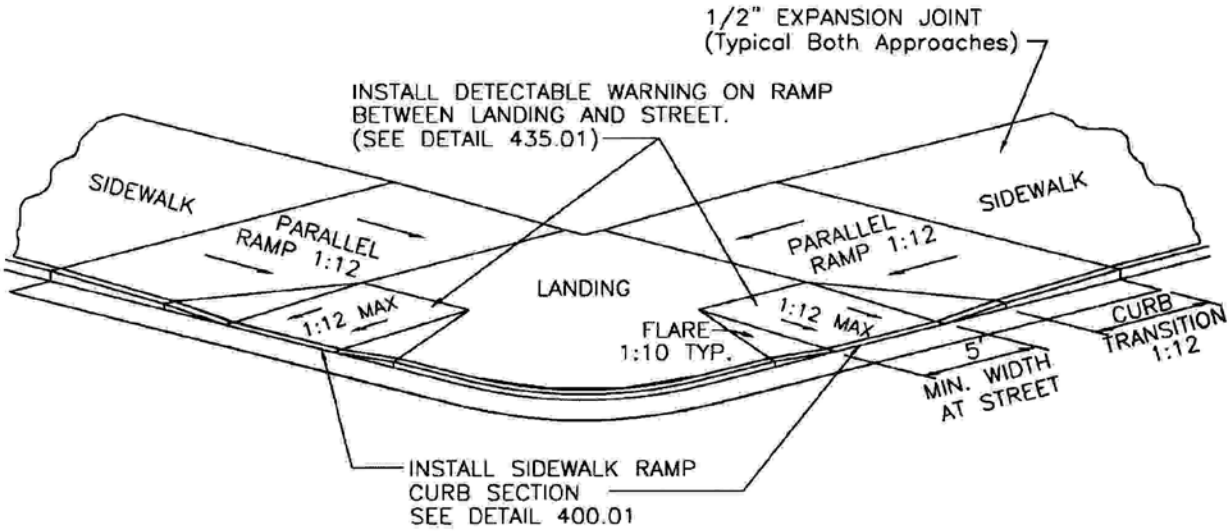

NOTE:

1. RAMP SHALL BE 4" THICK CLASS A CONCRETE.
2. EXPANSION JOINT SHALL BE 1/2" PREFORMED CORK OR BITUMINOUS EXPANSION JOINT MATERIAL.
3. MAXIMUM RAMP CROSS SLOPE IS 1/4" PER FT.
4. ALL SLOPES ARE MEASURED FROM THE HORIZONTAL.
5. REPLACE STANDARD CURB SECTION WITH SIDEWALK RAMP CURB SECTION – DETAIL 400.01
6. RAMP 1:12 MAX. USE FLATTER WHEN POSSIBLE.
7. LANDING AREA SHALL BE 4'–0" MIN WIDTH, CROSS SLOPE OF LANDING SHALL NOT EXCEED 1/4" PER FT.
8. TYPE "B" RAMP PROVIDES PARALLEL RAMPS TO REDUCE THE PERPENDICULAR RAMP LENGTH AND PROVIDE ADEQUATE LANDING.
9. RAMP EXTENDS INTO SIDEWALK, FLARE SLOPE MUST NOT EXCEED 1:10.

Approved 02/19/02 Date Revisions	COUNTY OF BOONE MISSOURI PUBLIC WORKS	SIDEWALK RAMP Sidewalk at Back of Curb (Type B)	432.02

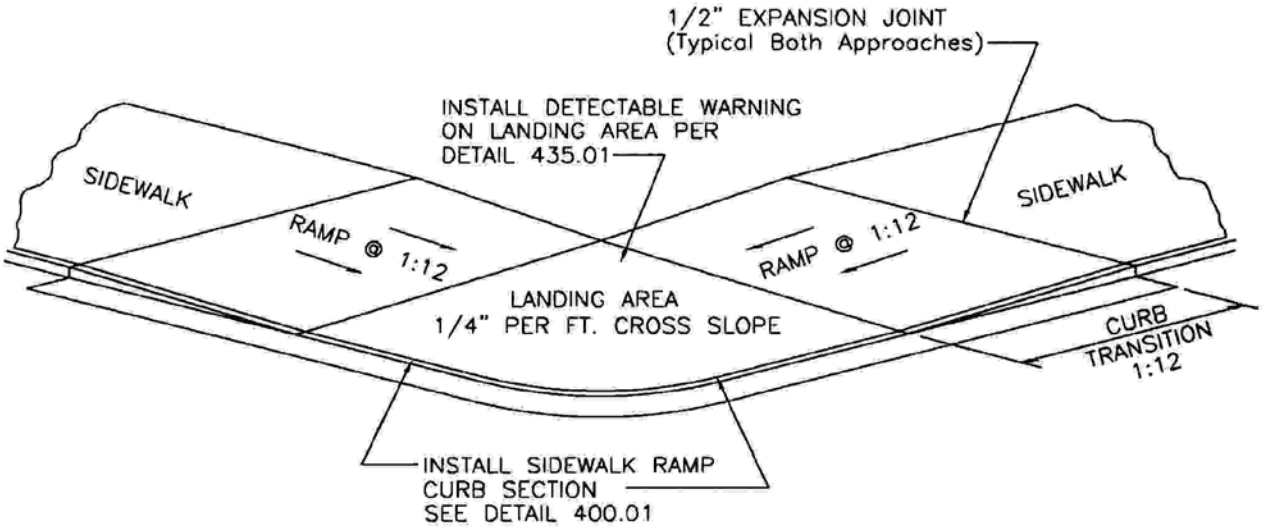

NOTE:

1. RAMP SHALL BE 4" THICK CLASS A CONCRETE.
2. EXPANSION JOINT SHALL BE 1/2" PREFORMED CORK OR BITUMINOUS EXPANSION JOINT MATERIAL.
3. MAXIMUM RAMP CROSS SLOPE IS 1/4" PER FT.
4. ALL SLOPES ARE MEASURED FROM THE HORIZONTAL.
5. REPLACE STANDARD CURB SECTION WITH SIDEWALK RAMP CURB SECTION – DETAIL 400.01
6. RAMP LENGTH IS DEPENDENT ON 1:12 MAX. SLOPE. USE FLATTER WHEN POSSIBLE.
7. LANDING AREA SHALL BE 4'-0" MIN WIDTH, CROSS SLOPE OF LANDING SHALL NOT EXCEED 1/4" PER FT.
8. USE TYPE "C" RAMP ONLY IF TYPE "A" & "B" ARE NOT FEASIBLE.

Approved 02/19/02 Date	COUNTY OF BOONE MISSOURI PUBLIC WORKS	SIDEWALK RAMP Sidewalk at Back of Curb (Type C)	432.03
Revisions			

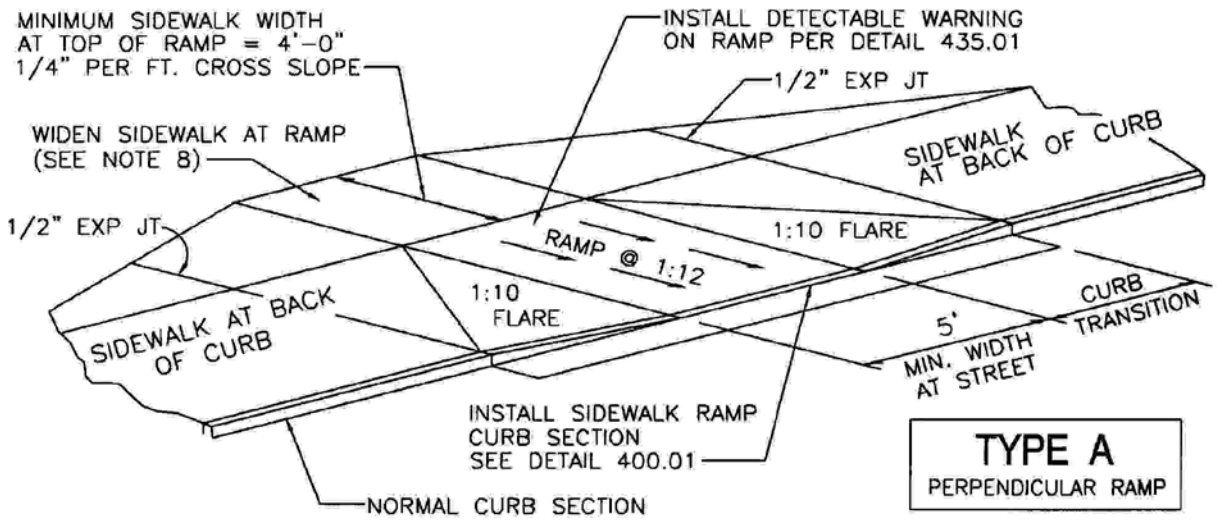

TYPE A
PERPENDICULAR RAMP

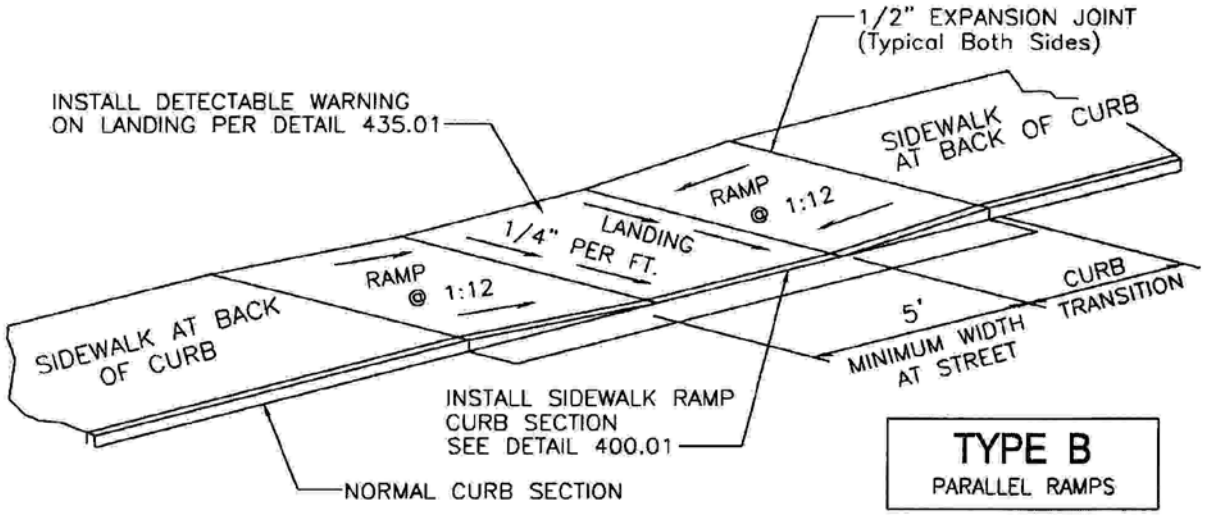

TYPE B
PARALLEL RAMPS

NOTE:

1. RAMP SHALL BE 4" THICK CLASS A CONCRETE.
2. EXPANSION JOINT SHALL BE 1/2" PREFORMED CORK OR BITUMINOUS EXPANSION JOINT MATERIAL.
3. MAXIMUM RAMP CROSS SLOPE IS 1/4" PER FT.
4. ALL SLOPES ARE MEASURED FROM THE HORIZONTAL.
5. REPLACE STANDARD CURB SECTION WITH SIDEWALK RAMP CURB SECTION – DETAIL 400.01
6. RAMP LENGTH IS DEPENDENT ON 1:12 MAX. SLOPE. USE FLATTER WHEN POSSIBLE.
7. LANDING AREA SHALL BE 4'-0" MIN WIDTH, CROSS SLOPE OF LANDING SHALL NOT EXCEED 1/4" PER FT.
8. TYPE "A" RAMP NOT APPLICABLE WHEN NORMAL SIDEWALK WIDTH DOES NOT PROVIDE 4'-0" LANDING AT THE TOP OF RAMP, WIDEN SIDEWALK OR USE TYPE "B" RAMP.
9. 10:1 FLARES ARE REQUIRED ON TYPE "A" RAMPS.

Approved 02/19/02 Date	COUNTY OF BOONE MISSOURI PUBLIC WORKS	**MIDBLOCK SIDEWALK RAMP** Sidewalk at Back of Curb	**433.01**
Revisions		

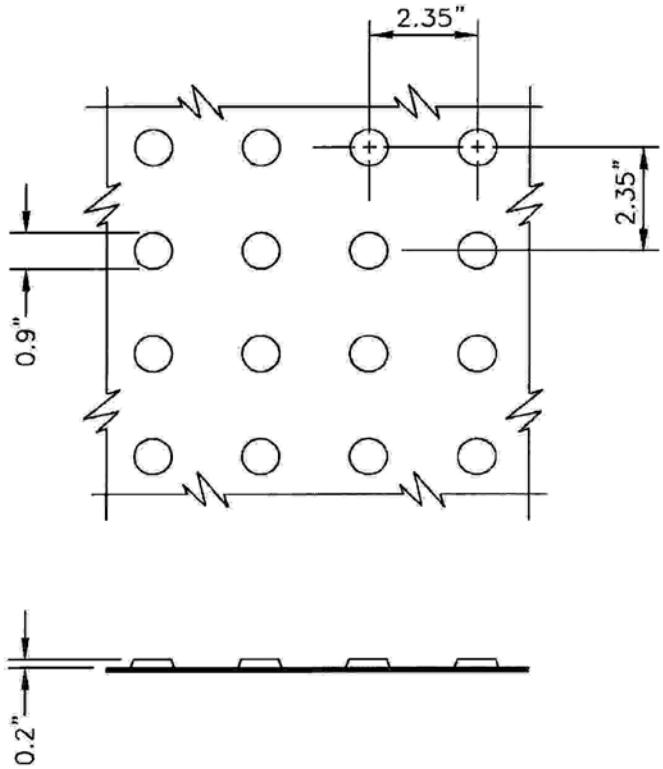

NOTE: DETECTABLE WARNING SHALL CONSIST OF OF RAISED TRUNCATED DOMES WITH A DIAMETER OF 0.9", A HEIGHT OF NOMINAL 0.2", AND A CENTER-TO-CENTER SPACING OF NOMINAL 2.35". AND SHALL CONTRAST VISUALLY WITH ADJOINING SURFACES, ACHIEVED BY THE ADDITION OF A RED PIGMENT TO THE CONCRETE MIX. DOME PATTERN SHALL BE STAMPED INTO THE WET CONCRETE AND SHALL BE AND INTEGRAL PART OF THE WALKING SURFACE.

Approved 02/19/02 Date	COUNTY OF BOONE MISSOURI PUBLIC WORKS	DETECTABLE WARNING	435.01
Revisions			

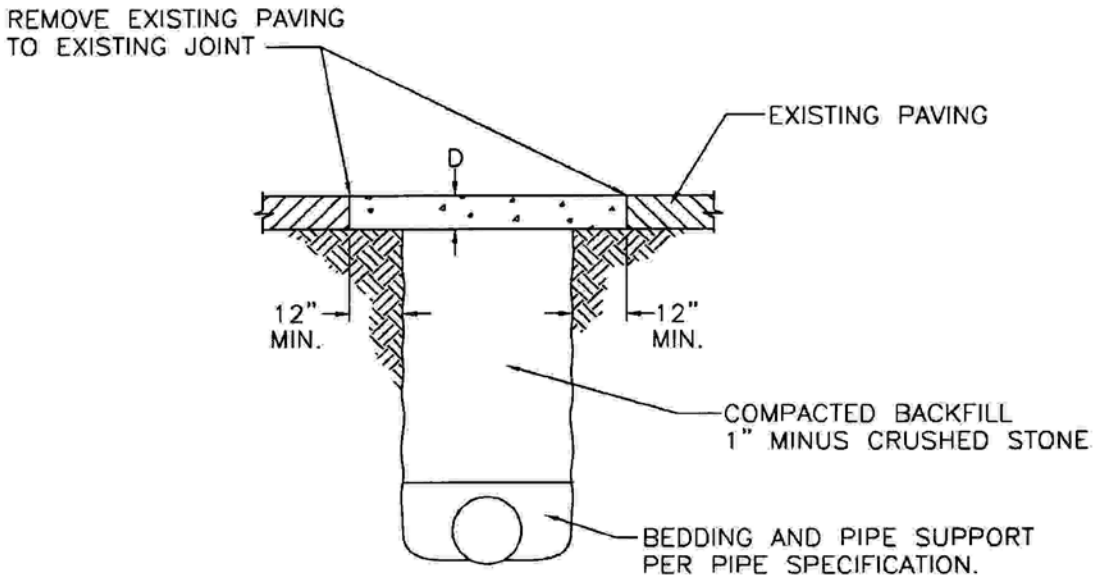

NOTE:

D = 4" PORTLAND CEMENT CONCRETE FOR SIDEWALKS
D = 6" PORTLAND CEMENT CONCRETE FOR RESIDENTIAL DRIVEWAYS
D = 7" PORTLAND CEMENT CONCRETE FOR COMMERCIAL DRIVEWAYS

Approved 02/19/02 Date Revisions	COUNTY OF BOONE MISSOURI PUBLIC WORKS	PATCHING & BACKFILLING (Driveways / Sidewalks)	440.01

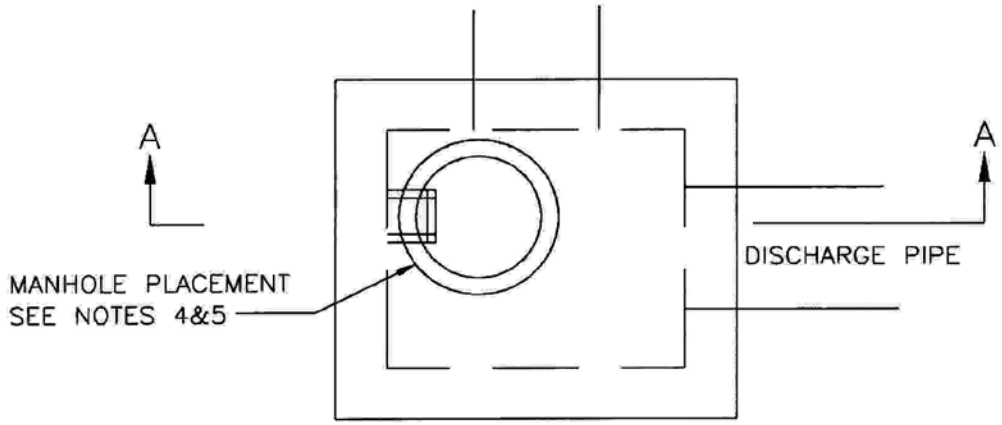

PLAN VIEW

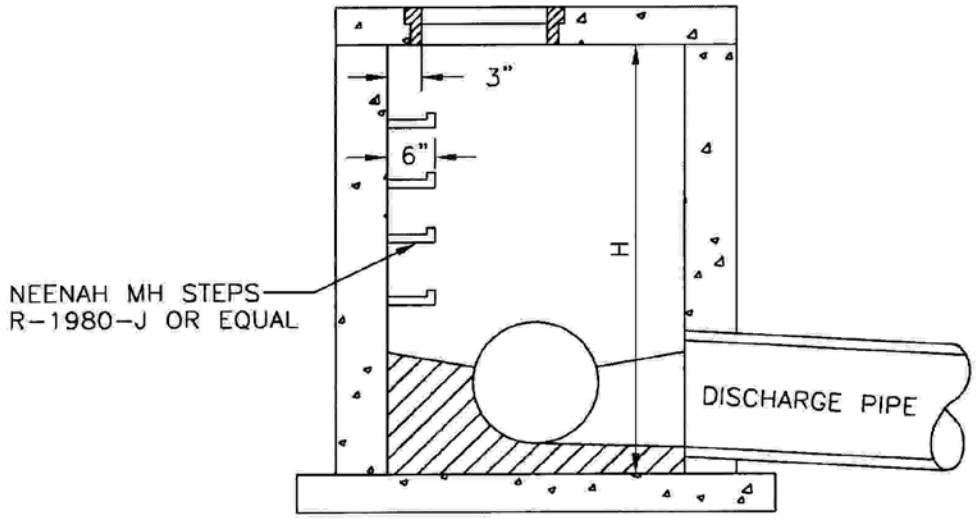

SECTION A-A

NOTES:

1. STEPS NOT REQUIRED WHERE H IS LESS THAN 4'.
2. CAST IRON STEPS STEPS SHALL BE NEENAH R-1980-J OR EQUAL
3. STEPS SHALL BE PLACED ON VACANT WALL WHEN POSSIBLE
4. MANHOLE RING SHALL BE OFFSET TOWARD WALL WITH STEPS.
5. MANHOLE RING SHALL BE CENTERED ON CENTERLINE OF STEPS
6. STAGGER STEPS 2" EACH WAY FROM CENTERLINE OF MANHOLE RING.
7. TOP STEP 24" BELOW TOP OF SLAB
8. STEP SPACING TO BE 16", BOTTOM STEP TO BE NO HIGHER THAN 16" FROM INVERT.

Approved 02/19/02 Date	COUNTY OF BOONE MISSOURI PUBLIC WORKS	DRAINAGE STRUCTURE STEPS	500.01
Revisions			

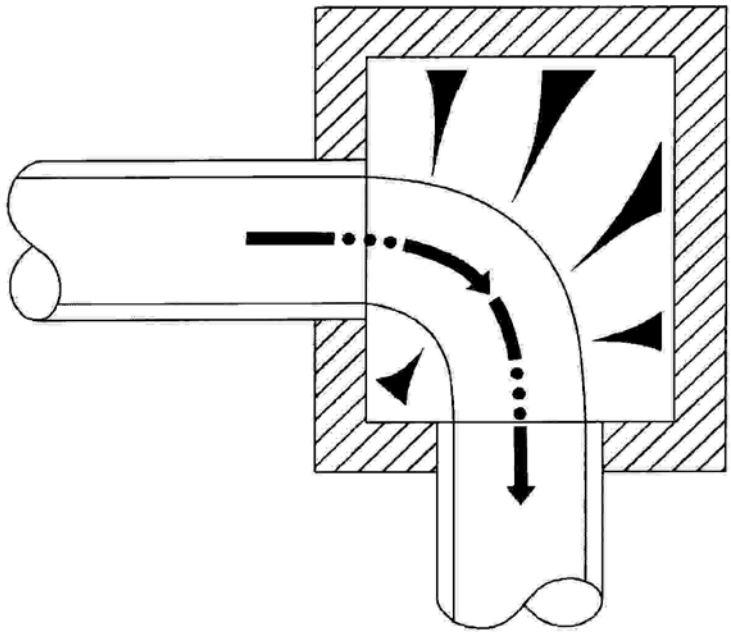

PLAN

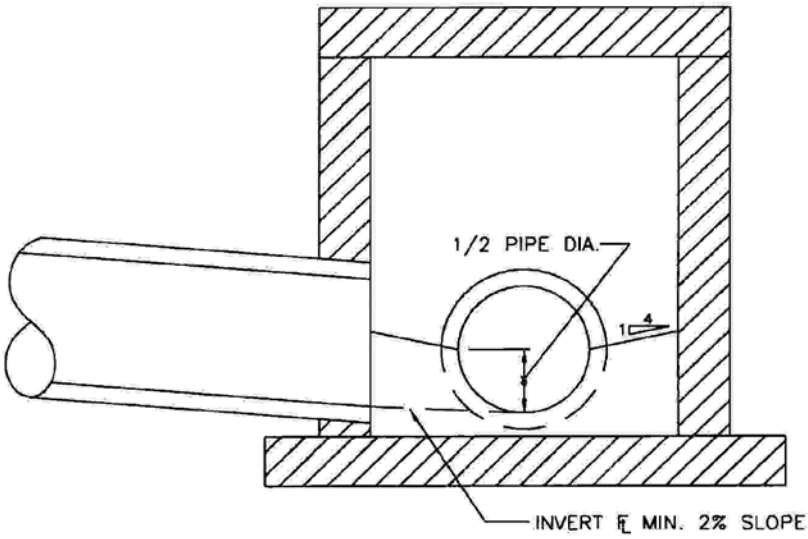

SECTION

NOTES:

1. FORM ALL INVERTS FOR SMOOTH FLOW THRU STRUCTURE.
2. INVERT SHALL BE FORMED UP TO 1/2 THE PIPE DIAMETER.
3. INVERT SHALL BE CLASS E CONCRETE.

DWM Approved	02/19/02 Date	COUNTY OF BOONE MISSOURI PUBLIC WORKS	DRAINAGE STRUCTURE INVERT	500.02
Revisions				

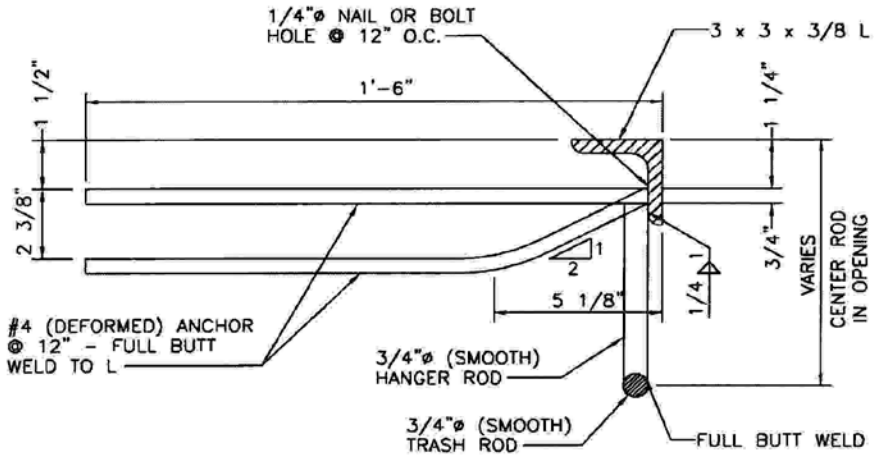

SECTION

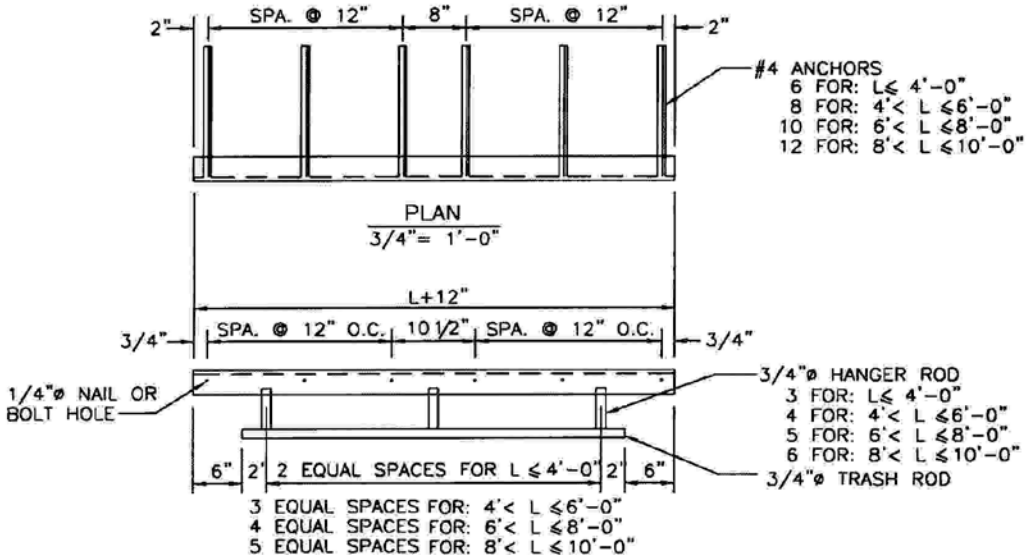

FRONT ELEV.

NOTES:

1. STRUCTURAL STEEL SHALL BE GRADE A-36
2. EXPOSED STEEL SURFACES TO BE FINISHED SMOOTH.
3. HOT DIP GALVANIZE ASSEMBLY, EXCEPT THAT GALV. NOT REQUIRED ON DEFORMED ANCHORS. CHIPPING NOT REQUIRED ON ANCHOR WELDS.
4. NAILS OR BOLTS USED TO ANCHOR ANGLE ASSEMBLY TO FORM SHALL BE REMOVED OR CUT OFF FLUSH WITH SURFACE OF ANGLE.
5. DIMENSION "L" REPRESENTS THE INSIDE INLET DIMENSION.

Approved 02/19/02 Date	COUNTY OF BOONE MISSOURI PUBLIC WORKS	INLET OPENING TRASH RACK	500.03
Revisions			

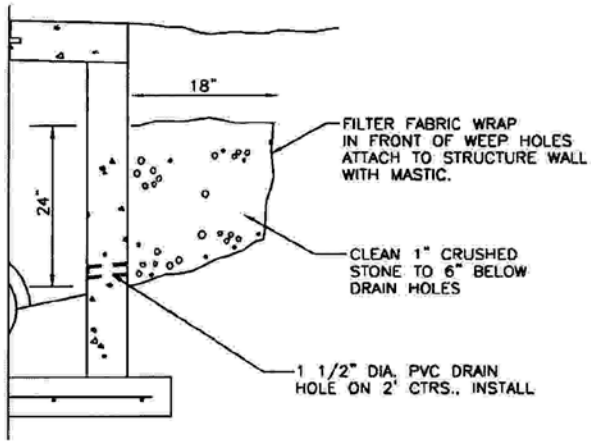

PARTIAL SECTION

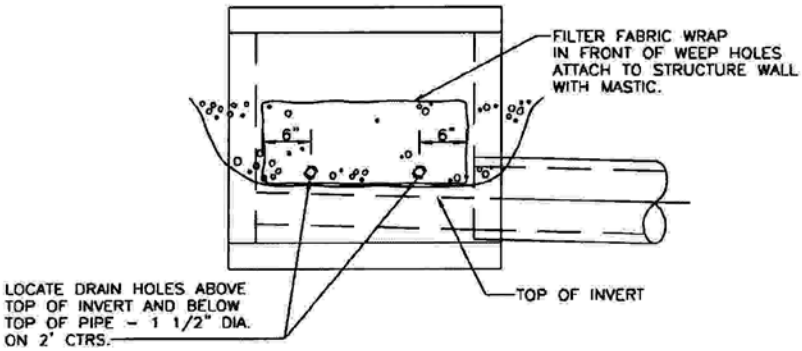

FRONT ELEVATION

NOTE:

1. PLACE WEEP HOLES ON UPSTREAM FACE OF ALL STRUCTURES AND ALSO ON ROADWAY FACE OF CURB INLET STRUCTURES.
2. WEEP HOLE FILTER FABRIC SHALL CONSIST OF A NON–WOVEN, POLYPROPYLENE TYPE FABRIC SUCH AS: AMOCO 4553 NON–WOVEN GEOTEXTILE FABRIC OR APPROVED EQUAL.

DWM 02/19/02 Approved Date	COUNTY OF BOONE MISSOURI PUBLIC WORKS	DRAINAGE STRUCTURE WEEP HOLES	500.04
Revisions			

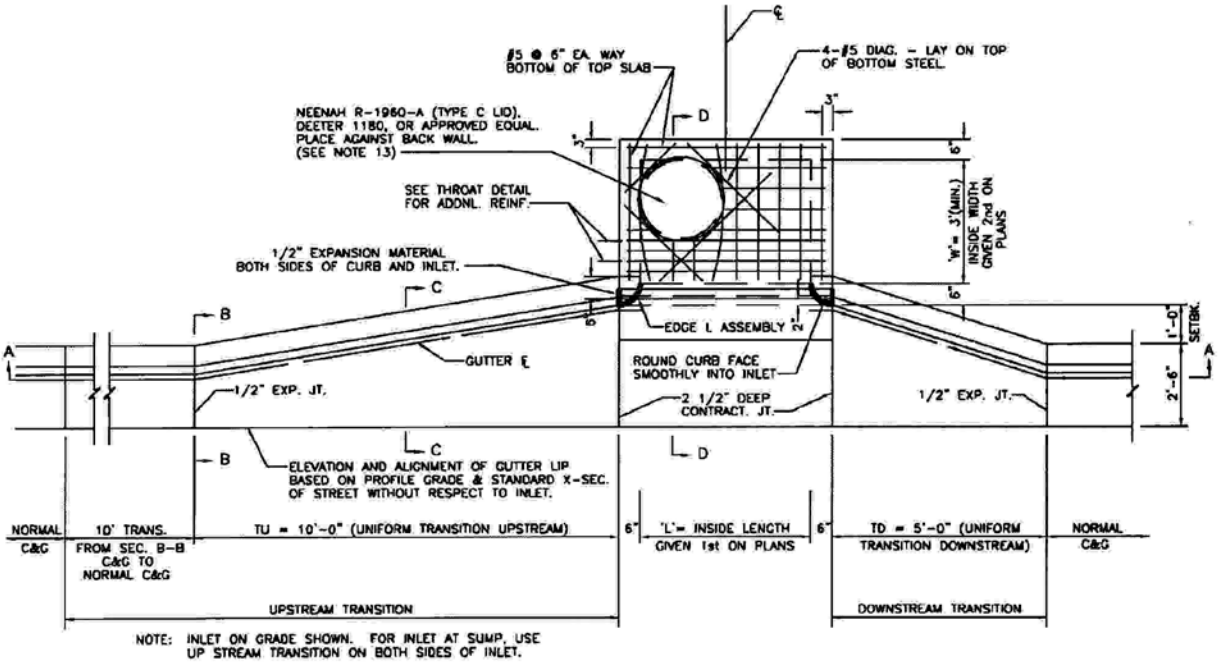

PLAN

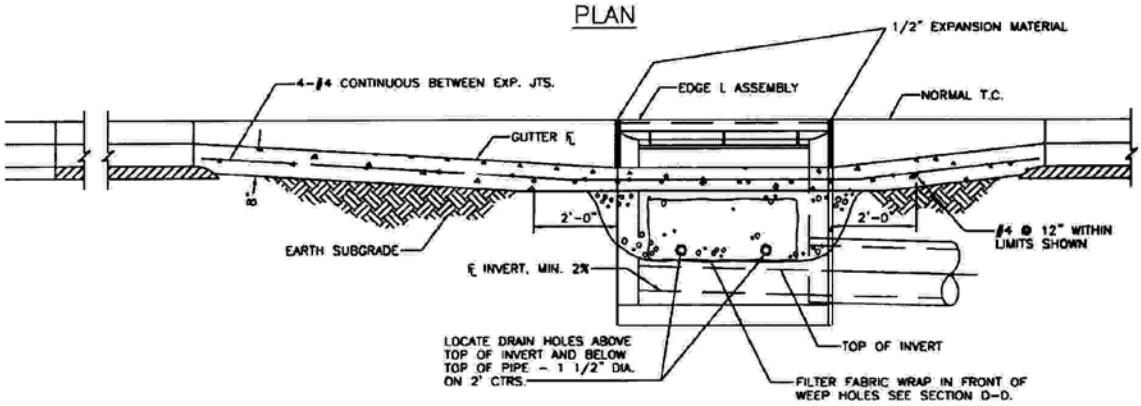

SECTION A-A

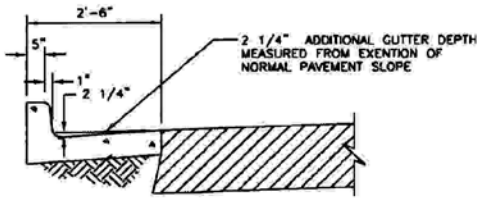

SECTION B-B

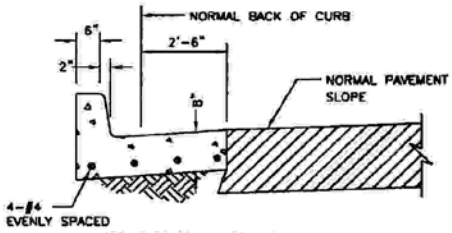

SECTION C-C

DWM Approved 02/19/02 Date	COUNTY OF BOONE MISSOURI PUBLIC WORKS	TYPE M INLET (Plan & Sections)	505.01A
Revisions			

TYPE M INLET NOTES

1. CONCRETE SHALL BE: CLASS E FOR BASE, CLASS D FOR WALLS AND TOP.
2. REINFORCING STEEL SHALL BE GRADE 60
3. THIS DESIGN IS FOR L = 4'-0", 6'-0", 8'-0", OR 10'-0".
4. INLET WILL BE CALLED OUT ON PLANS AS 'L'x'W' STD. CURB INLET, OR 'L'x'W' DEFLECTOR CURB INLET. DIMENSIONS 'L'&'W' GIVEN ON PLANS AS 'L'x'W'.
5. STA AND OFFSET OR COORDINATES SHOWN ON PLAN ARE GIVEN TO CENTER OF INLET WALLS.
6. THE ELEVATION OF THE TOP OF INLET GIVEN ON THE PLAN SHEET IS AT THE CENTER OF THE FRONT EDGE OF THE EDGE ANGLE ASSEMBLY. SLOPE THE TOP TO MATCH STREET GRADE, AND CROSS SLOPE OF RIGHT OF WAY.
7. DIMENSIONS TU AND TD AS SHOWN EXCEPT WHERE NOTED OTHERWISE IN PLANS.
8. TRANSITIONS ALONG LENGTH TU & TD MUST BE UNIFORM BETWEEN STANDARD CURB & GUTTER CROSS SECTION & THAT SHOWN AT INLET. FORM CURB FACE WITH FLEXIBLE FORM.
9. REINFORCEMENT:
   (A) BEND AROUND MH RING WHEREVER FEASIBLE. (SEE PLAN)
   (B) MINIMUM 2" COVER REQUIRED UNLESS NOTED OTHERWISE.
10. BROOM FINISH TOP SLAB.
11. HORIZONTAL PROJECTION OF PIPE CENTERLINE SHALL INTERSECT AT THE CENTER OF INLET, UNLESS OTHERWISE SHOWN.
12. TRIM PIPE FLUSH WITH INSIDE WALLS.
13. CAST IRON STEPS, FRAME, AND LID:
    STEPS NOT REQUIRED WHERE H IS LESS THAN 4'.
    CAST IRON STEPS SHALL BE NEENAH R-1980-J OR EQUAL
    STEPS SHALL BE PLACED ON VACANT WALL WHEN POSSIBLE
    MANHOLE RING SHALL BE OFFSET TOWARD WALL WITH STEPS.
    MANHOLE RING SHALL BE CENTERED ON CENTERLINE OF STEPS
    STAGGER STEPS 2" EACH WAY FROM CENTERLINE OF MANHOLE RING.
    TOP STEP 24" BELOW TOP OF SLAB
    STEP SPACING TO BE 16", BOTTOM STEP TO BE NO HIGHER THAN 16" FROM INVERT.
14. CLASS E CONCRETE INVERT SHALL BE FORMED UP TO 1/2 THE PIPE DIAMETER.
15. WEEP HOLE FILTER FABRIC SHALL CONSIST OF A NON-WOVEN, POLYPROPYLENE TYPE FABRIC SUCH AS AMOCO 4553 NON-WOVEN GEOTEXTILE FABRIC OR APPROVED EQUAL.
16. 1/2" EXPANSION MATERIAL TO BE PLACED BETWEEN THROAT AND INLET AS WELL AS CURB AND INLET.
17. TWO (2) LAYERS OF TAR PAPER SHALL BE PLACED BETWEEN THROAT POUR AND INLET WALL TO ALLOW MOVEMENT.

Approved 02/19/02 Date	COUNTY OF BOONE MISSOURI PUBLIC WORKS	TYPE M INLET NOTES	505.01B
Revisions			

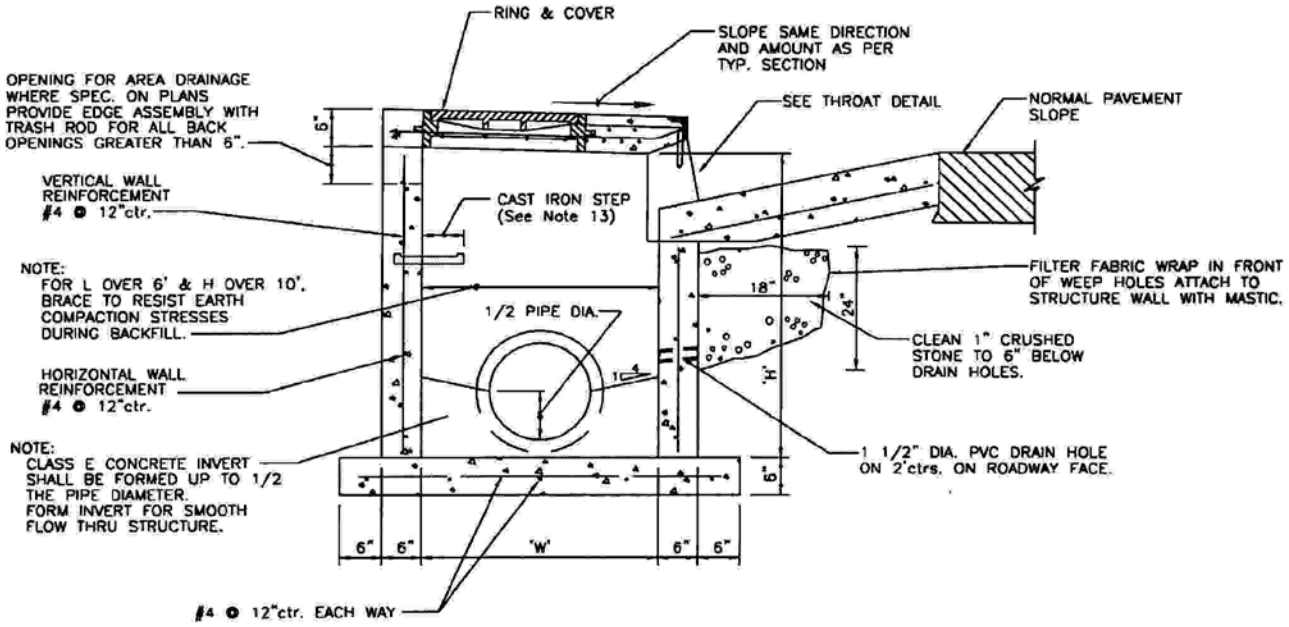

SECTION D–D

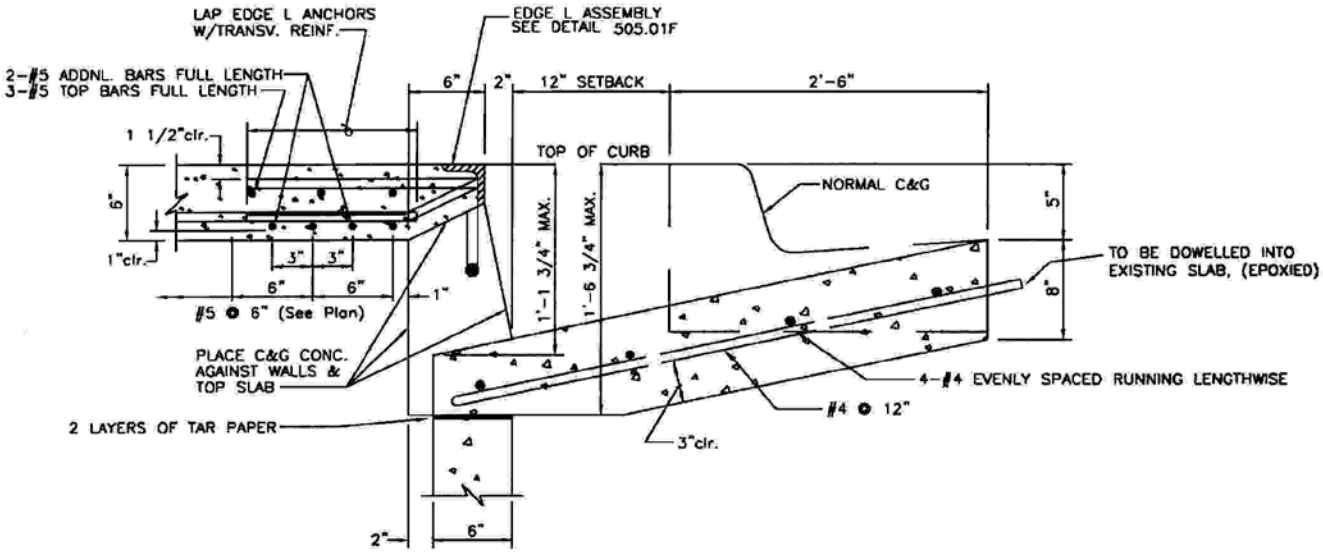

THROAT DETAIL

NOTE:

1/2" EXPANSION MATERIAL TO BE PLACED BETWEEN THROAT AND INLET, AND CURB AND INLET.

DWM Approved	02/19/02 Date	COUNTY OF BOONE MISSOURI PUBLIC WORKS	TYPE M INLET SECTION AND DETAIL	505.01C
Revisions				

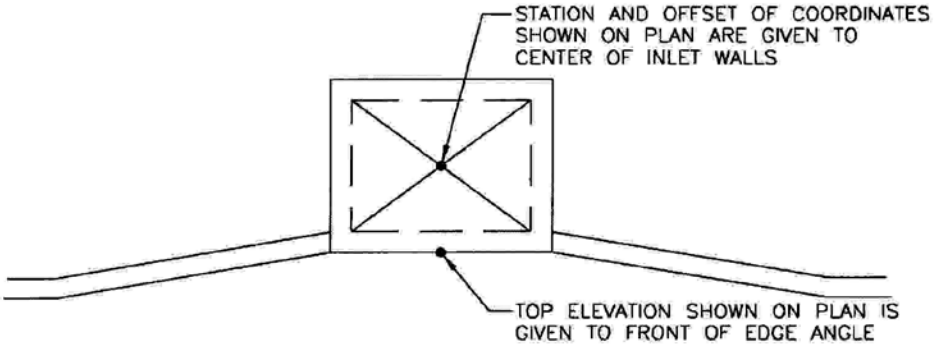

INLET PLAN INFORMATION

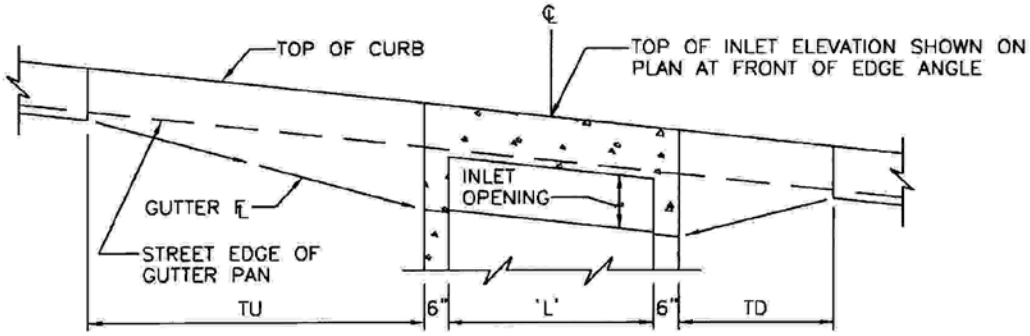

ON SLOPE

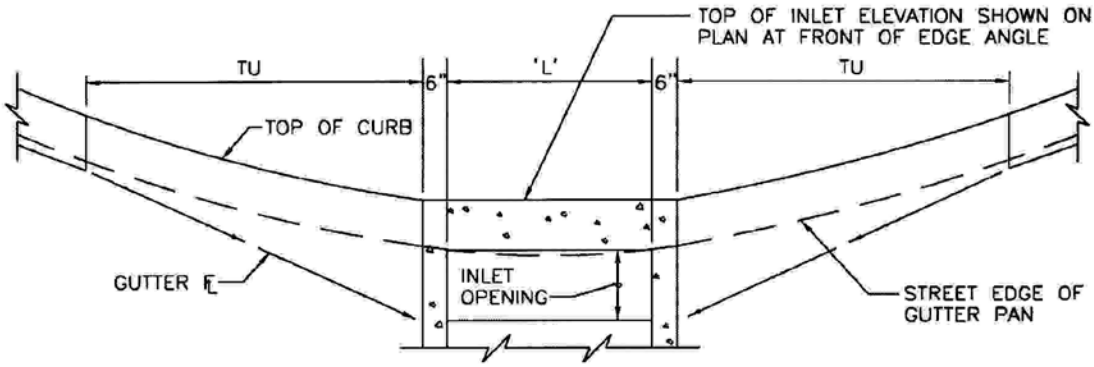

AT LOW POINT

INLET SETTING DIAGRAMS

DWM 02/19/02 Approved Date	COUNTY OF BOONE MISSOURI PUBLIC WORKS	TYPE M INLET SETTING DIAGRAM	505.01D
Revisions			

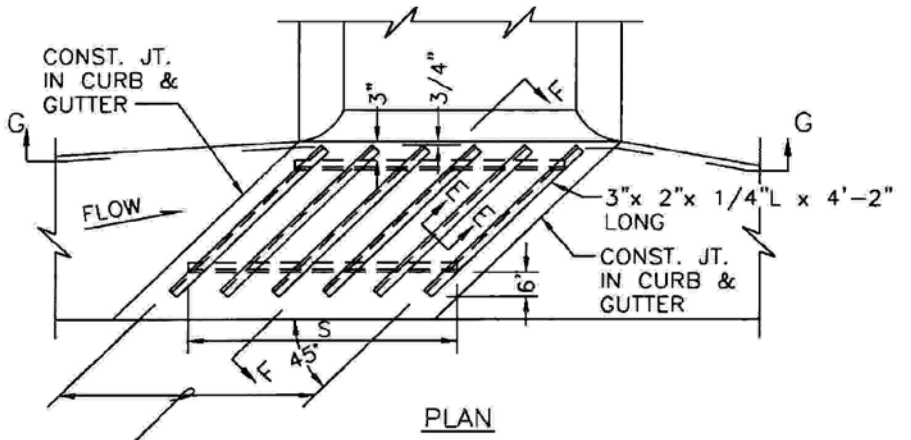

PLAN

DEFLECTORS TO BE EQUALLY SPACED

- FOR L=4'; 6 DEFLECTORS–S=4'–6"
- FOR L=6'; 8 DEFLECTORS–S=6'–6"
- FOR L=8'; 11 DEFLECTORS–S=8'–6"
- FOR L=10'; 13 DEFLECTORS–S=10'–6"

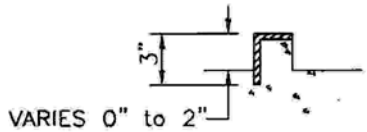

SECTION E–E

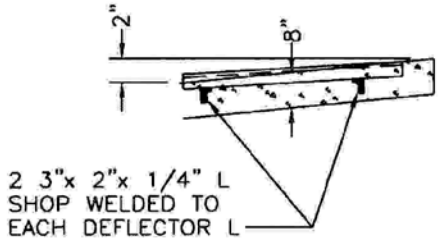

SECTION F–F

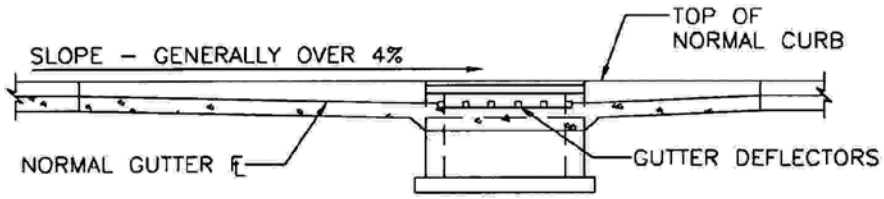

SECTION G–G

GUTTER DEFLECTOR NOTES:

1. ASSEMBLY TO BE HOT DIP GALVANIZED.
2. TO BE USED WHERE DEFLECTOR CURB INLET IS SPECIFIED
3. BEFORE PLACING CONCRETE; SUPPORT UNIT SECURELY IN FINAL POSITION BY ATTACHING TO METAL RODS DRIVEN INTO SUBGRADE
4. TO BE USED WHEN GRADE IS 4% OR GREATER.

DWM 02/19/02 Approved Date	COUNTY OF BOONE MISSOURI PUBLIC WORKS	TYPE M INLET DEFLECTOR DETAIL	505.01E
Revisions			

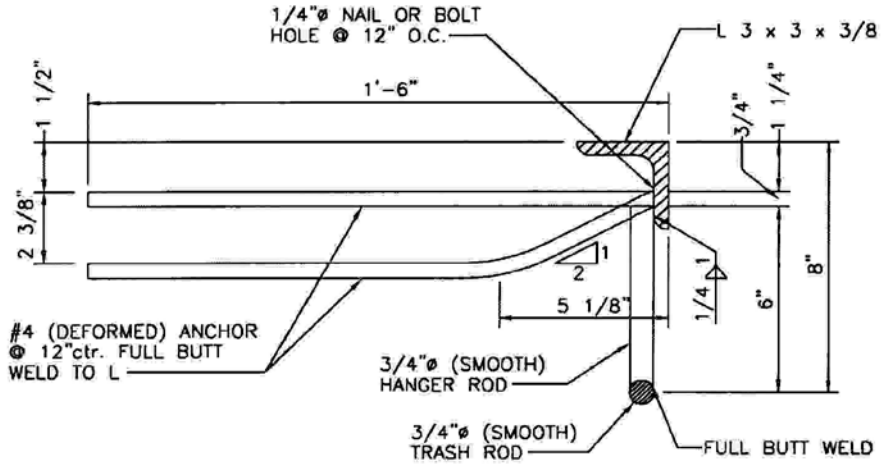

SECTION

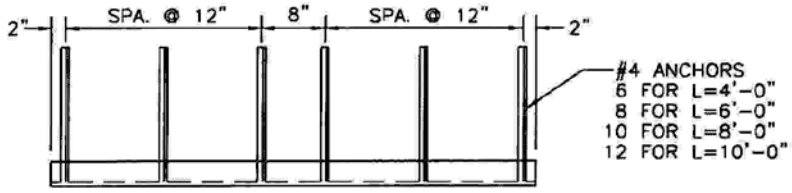

PLAN

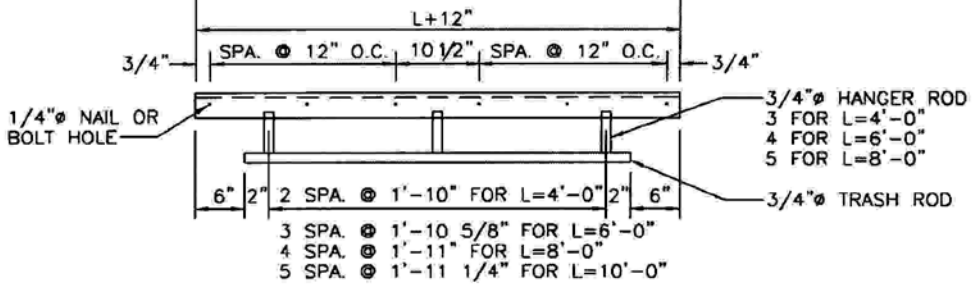

FRONT ELEV.

NOTES:

1. STRUCTURAL STEEL SHALL BE GRADE A-36
2. EXPOSED STEEL SURFACES TO BE FINISHED SMOOTH.
3. HOT DIP GALVANIZE ASSEMBLY, EXCEPT THAT GALV. NOT REQUIRED ON DEFORMED ANCHORS. CHIPPING NOT REQUIRED ON ANCHOR WELDS.
4. NAILS OR BOLTS USED TO ANCHOR ANGLE ASSEMBLY TO FORM SHALL BE REMOVED OR CUT OFF FLUSH WITH SURFACE OF ANGLE.
5. DIMENSION "L" REPRESENTS THE INSIDE INLET DIMENSION.

DWM 02/19/02 Approved Date Revisions	COUNTY OF BOONE MISSOURI PUBLIC WORKS	TYPE M INLET EDGE ANGLE ASSEMBLY	505.01F

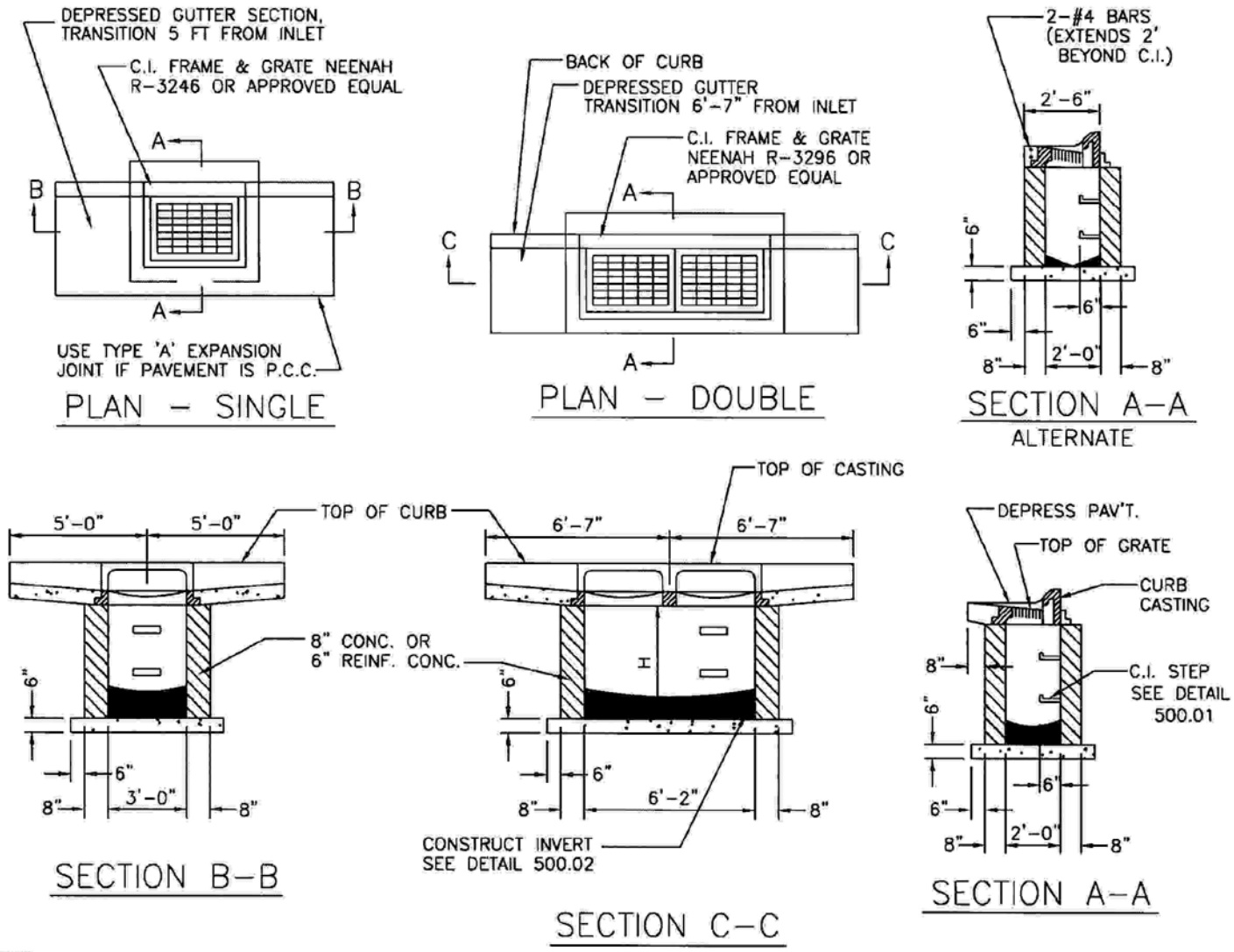

NOTES:

1. CONCRETE SHALL BE CLASS E FOR BASES AND D FOR WALLS AND TOP.
2. REINFORCING STEEL SHALL BE GRADE 60
3. INSTALL WEEP HOLES AS PER DETAIL 500.04
4. STRUCTURES WHERE H>8' SHALL BE REINFORCED CONCRETE (#4 BARS AT 12" CTRS, BOTH WAYS AND #4 BARS DIAGONAL AT PIPE OPENINGS)

Approved 02/19/02 Date

Revisions

PUBLIC WORKS

COUNTY OF BOONE MISSOURI

TYPE "A" INLET

505.02

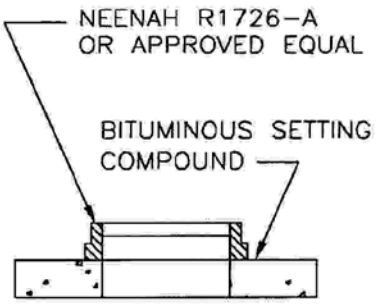

OPTIONAL TOP
(Use only when specified on plan)

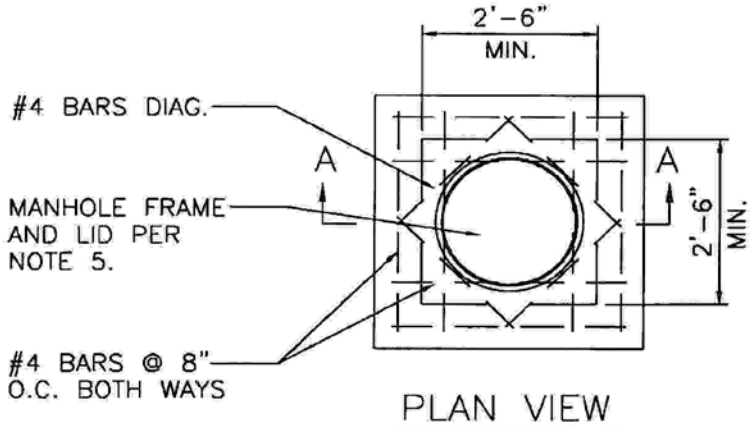

PLAN VIEW

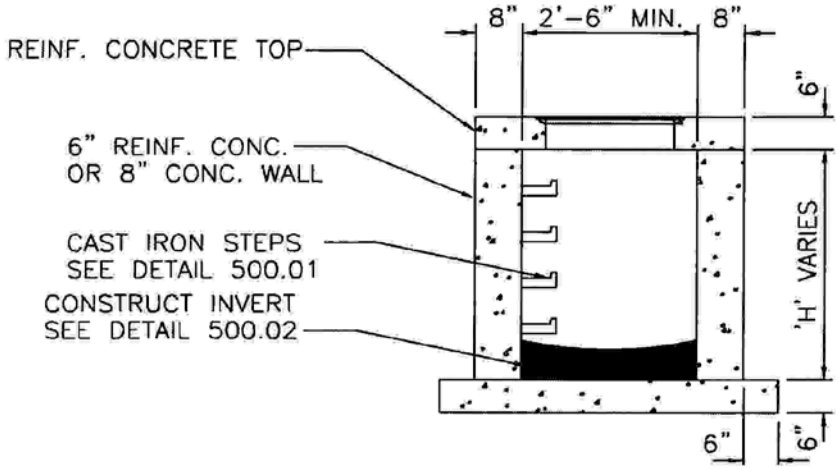

SECTION A-A
(Showing Standard Flush Top)

NOTES:

1. CONCRETE SHALL BE CLASS E FOR BASES AND D FOR WALLS AND TOP.
2. REINFORCING STEEL SHALL BE GRADE 60
3. INSTALL WEEP HOLES AS PER DETAIL 500.04
4. STRUCTURES WHERE H>8' SHALL BE REINFORCED CONCRETE (#4 BARS AT 12" CTRS, BOTH WAYS AND #4 BARS DIAGONAL AT PIPE OPENINGS)
5. FRAME AND LID SHALL BE NEENAH R-1960-A (TYPE C LID), DEETER 1180, OR APPROVED EQUAL. SEE DETAIL 500.01 FOR PLACEMENT.

DWM Approved	02/19/02 Date	COUNTY OF BOONE MISSOURI PUBLIC WORKS	JUNCTION BOX	510.01
Revisions				

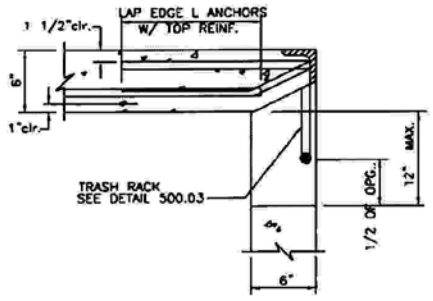

OPENINGS OVER 6"

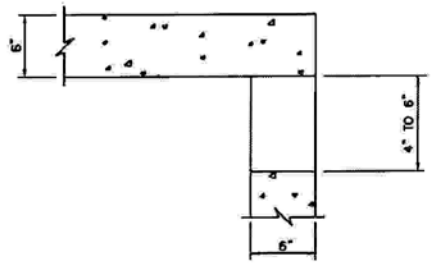

OPENINGS 4" TO 6"

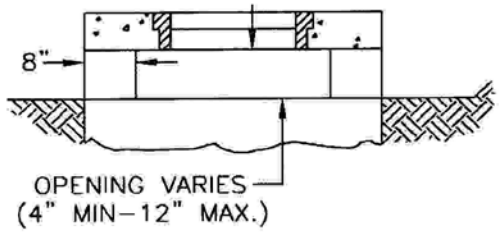

SIDE OPENING DETAIL

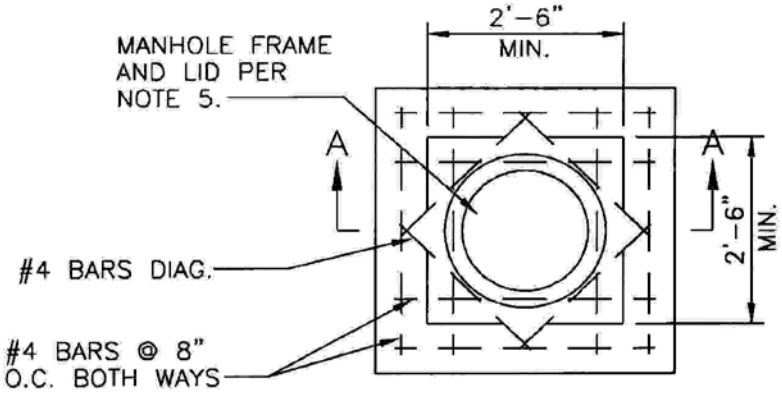

PLAN VIEW

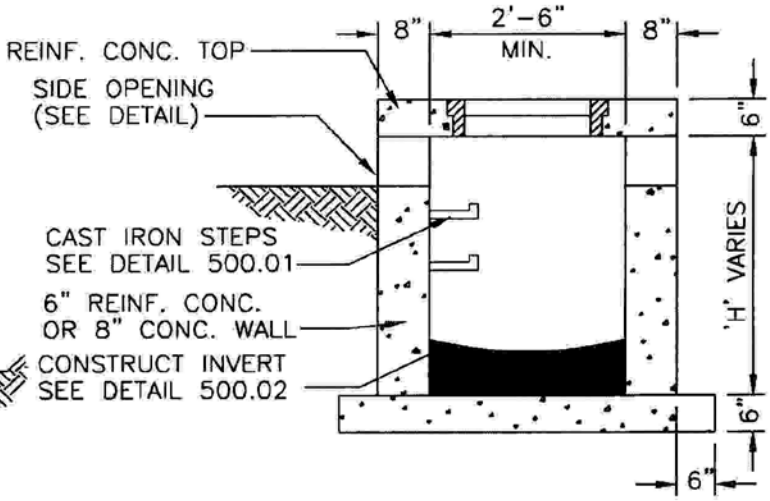

SECTION A–A

NOTES:

1. CONCRETE SHALL BE CLASS E FOR BASES AND D FOR WALLS AND TOP.
2. REINFORCING STEEL SHALL BE GRADE 60
3. INSTALL WEEP HOLES AS PER DETAIL 500.04
4. STRUCTURES WHERE H>8' SHALL BE REINFORCED CONCRETE (#4 BARS AT 12" CTRS, BOTH WAYS AND #4 BARS DIAGONAL AT PIPE OPENINGS)
5. FRAME AND LID SHALL BE NEENAH R–1960–A (TYPE C LID), DEETER 1180, OR APPROVED EQUAL. SEE DETAIL 500.01 FOR PLACEMENT.
6. SIDE OPENINGS TO BE ON ALL FOUR SIDES UNLESS NOTED OTHERWISE
7. INSTALL TRASH RACK ON OPENINGS OVER 6" SEE DETAIL 500.03

DWM Approved	02/19/02 Date	COUNTY OF BOONE MISSOURI PUBLIC WORKS	SIDE OPENING INLET	510.02
Revisions				

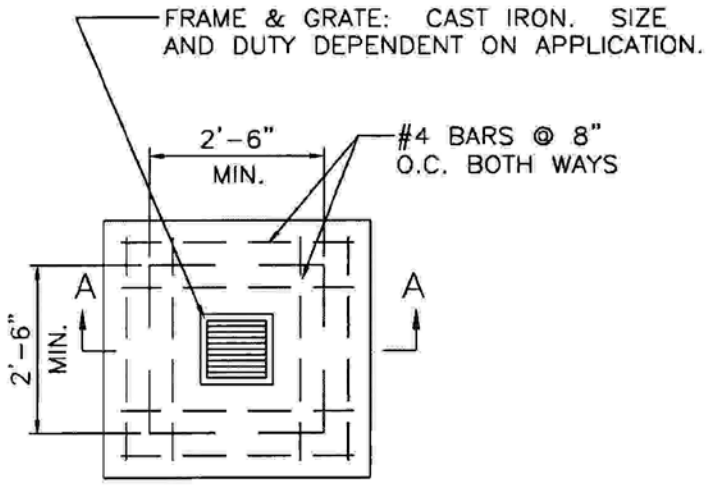

CATCH BASIN

PLAN VIEW

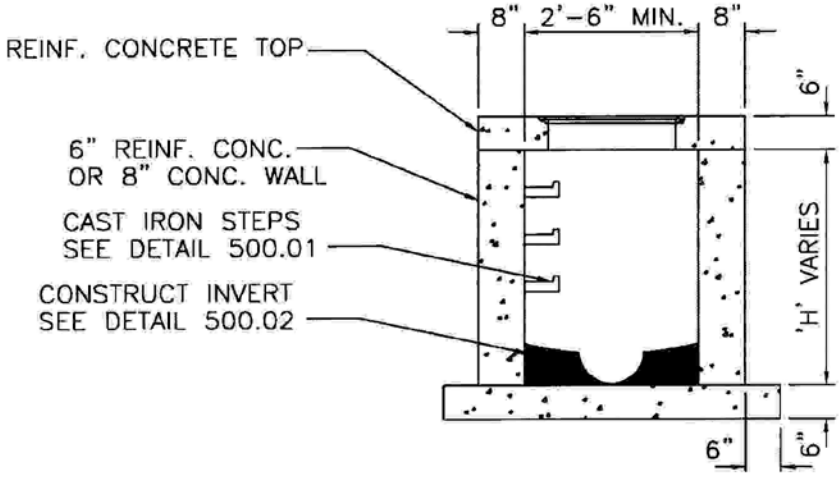

SECTION A–A

NOTES:

1. CONCRETE SHALL BE: CLASS E FOR BASES, CLASS D FOR WALLS AND TOP.
2. REINFORCING STEEL SHALL BE GRADE 60
3. INSTALL WEEP HOLES AS PER DETAIL 500.04
4. STRUCTURES WHERE H>8' SHALL BE REINFORCED CONCRETE (#4 BARS AT 12" CTRS, BOTH WAYS AND #4 BARS DIAGONAL AT PIPE OPENINGS)

Approved 02/19/02 Date	COUNTY OF BOONE MISSOURI PUBLIC WORKS	CATCH BASIN	510.03
Revisions			

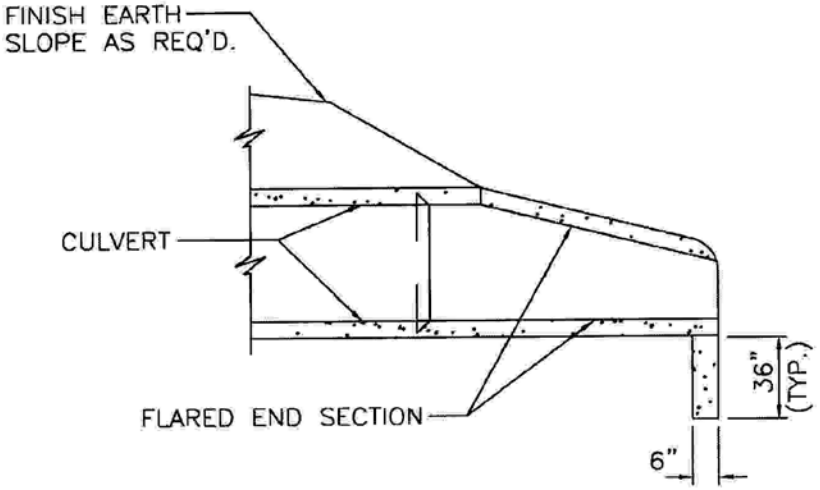

SECTION VIEW

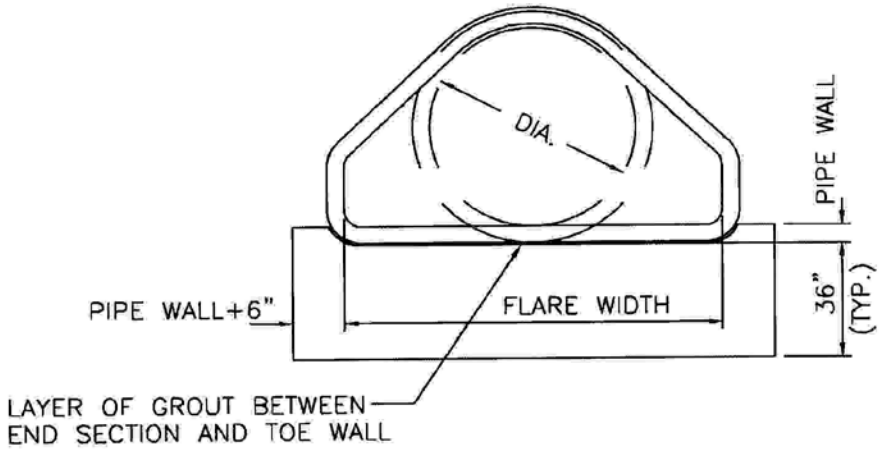

END VIEW

NOTE:
CONCRETE FOR TOE WALL SHALL BE CLASS E OR PRE-CAST EQUIVALENT.
THE USE OF PRE-CAST MUST BE PRE-APPROVED.

DWM 02/19/02 Approved Date	COUNTY OF BOONE MISSOURI PUBLIC WORKS	TOEWALL & END SECTION (FOR R.C.P.)	525.01
Revisions			

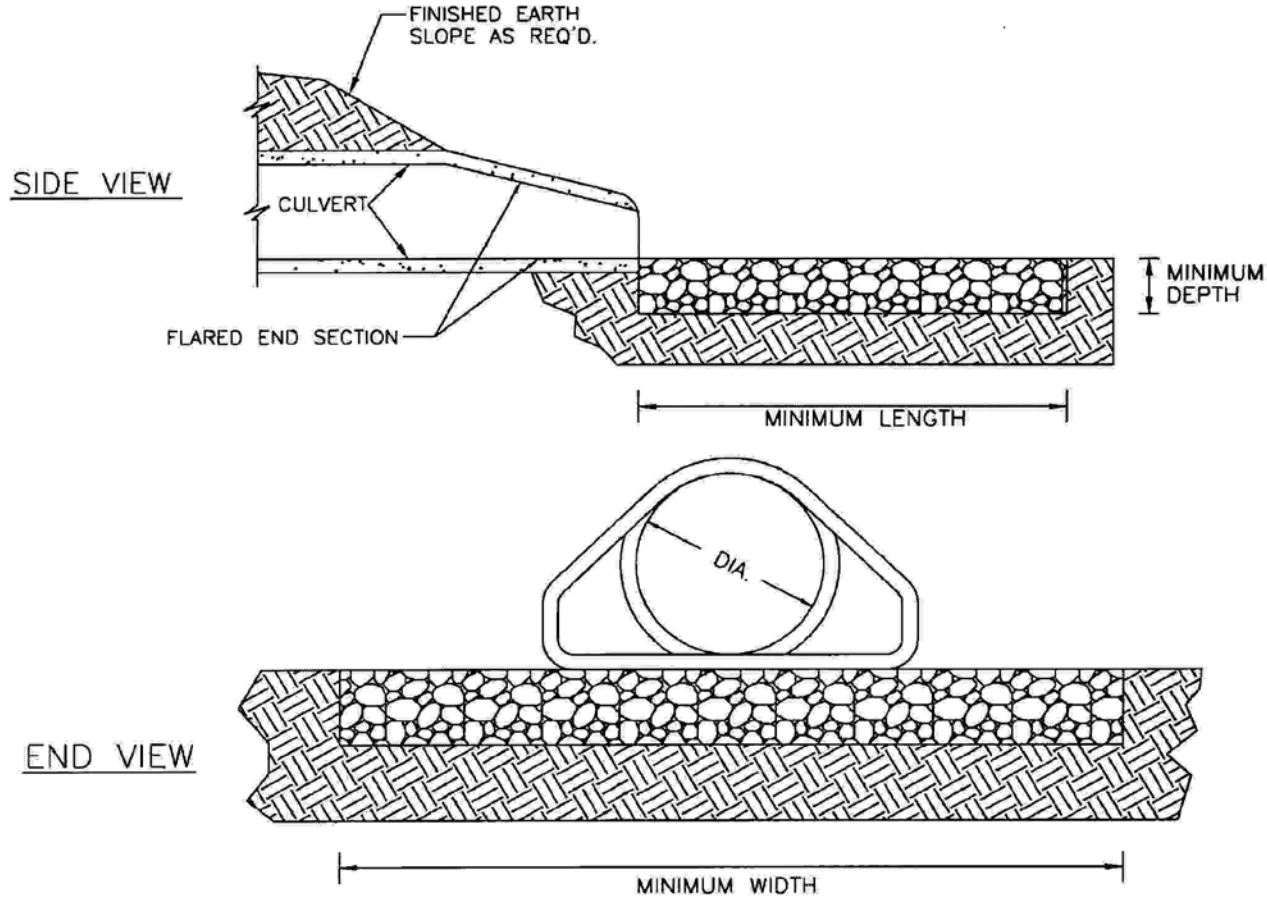

ROCK LINING FOR CULVERT OUTLETS					
CULVERT DIAM. INCHES	MINIMUM DEPTH AND WIDTH FEET	MINIMUM LENGTH FEET	ROCK LINING CU. YDS.	EQUIVALENT PIPE ARCH CULVERT (APPROX)	EQUIVALENT CONC. BOX CULVERT (APPROX) FEET
18	1 X 4	12	2		
24	1 X 6	14	3		2 X 1 1/2
30	1 X 7	16	4	8 – 5	2 X 2
36	1.5 X 9	18	9	8 – 6	3 X 2
42	2 X 10	20	15	8 – 7	3 X 3
48	2 X 12	20	18	8 – 8	4 X 3
54	2 X 13.5	22	22	8 – 9	4 X 4
60	2 X 15	25	28	8 – 10	5 X 4
66	2 X 18	25	33	8 – 11	5 X 5
72	2 X 20	30	44	8 – 12	5 X 6
84	2.5 X 25	35	81		6 X 6
96	2.5 X 30	40	111		7 X 7
108	3 X 32	40	142		8 X 8

DWM 02/19/02
Approved Date

Revisions

COUNTY OF BOONE MISSOURI
PUBLIC WORKS

ROCK LINING FOR CULVERT OUTLETS

525.02

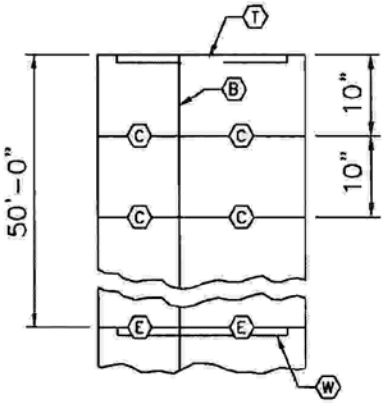

PLAN VIEW

LEGEND

- (C) SAW JOINT, FILL WITH BITUMASTIC JOINT SEALANT – SEE DETAIL.
- (E) 1/2" EXPANSION JOINT AT 50' INTERVALS.
- (T) TOE WALL TO BE CONSTRUCTED AT OUTLET END OF PAVED DITCHES.
- (B) KEY JOINT (SEE DETAIL)
- (W) CUT-OFF WALL @ 50'-0" SPA.

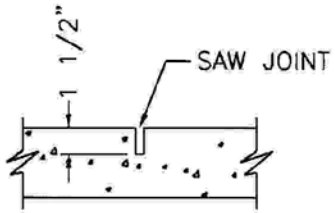

C JOINT DETAIL

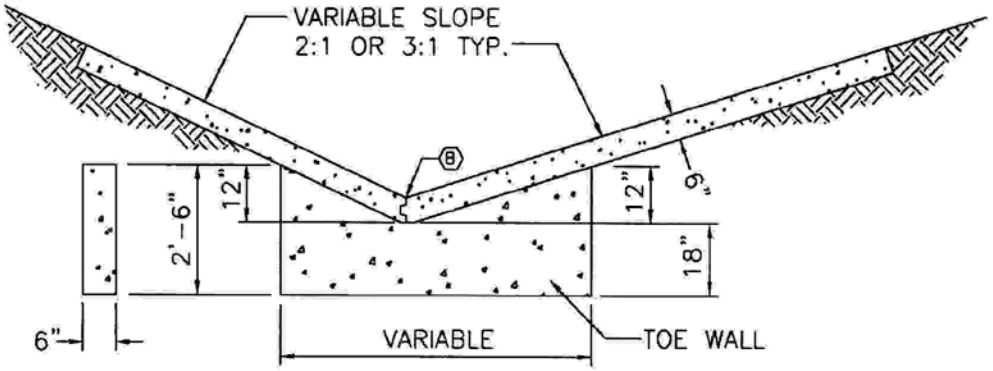

END SECTION

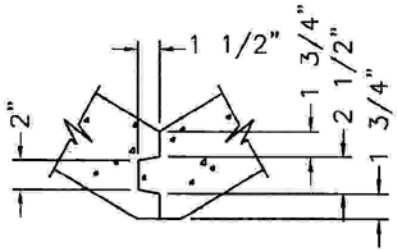

B JOINT DETAIL

SECTION THROUGH SWALE

SHOWING TOE WALL OR CUT-OFF WALL

NOTE:
CONCRETE SHALL BE CLASS E

Approved 02/19/02 Date

Revisions

PUBLIC WORKS

COUNTY OF BOONE MISSOURI

CONCRETE SWALE
(V-Type)

530.01

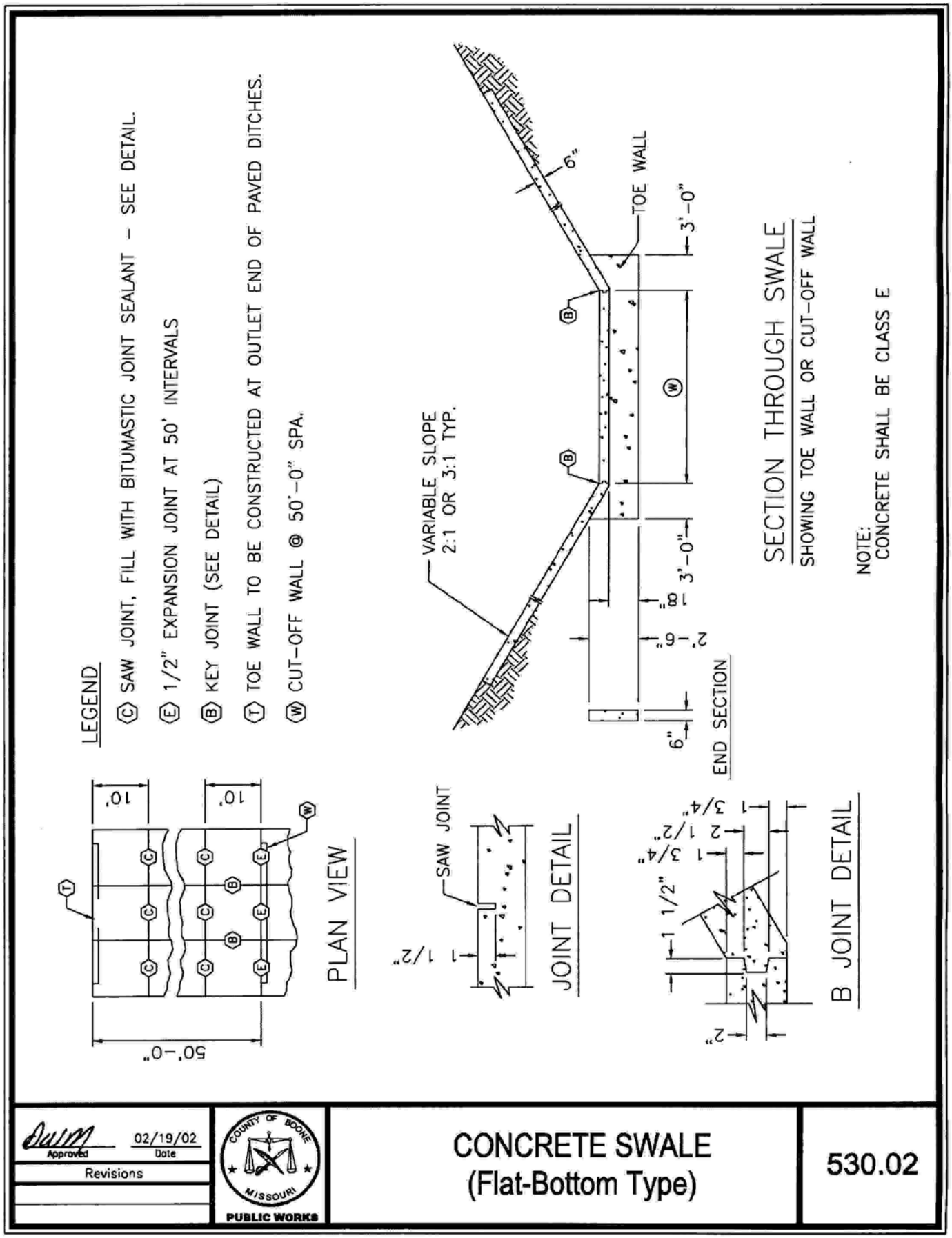
LEGEND
(C) SAW JOINT, FILL WITH BITUMASTIC JOINT SEALANT – SEE DETAIL.
(E) 1/2" EXPANSION JOINT AT 50' INTERVALS
(B) KEY JOINT (SEE DETAIL)
(T) TOE WALL TO BE CONSTRUCTED AT OUTLET END OF PAVED DITCHES.
(W) CUT-OFF WALL @ 50'-0" SPA.
10'
10'
50'-0"
PLAN VIEW
SAW JOINT
1/2"
JOINT DETAIL
VARIABLE SLOPE
2:1 OR 3:1 TYP.
6"
TOE WALL
3'-0"
3'-0"
1'-8"
2'-6"
6"
END SECTION
SECTION THROUGH SWALE
SHOWING TOE WALL OR CUT-OFF WALL
NOTE:
CONCRETE SHALL BE CLASS E
1 1/2"
1 3/4"
2 1/2"
1 3/4"
2"
B JOINT DETAIL
Approved
02/19/02
Date
Revisions
COUNTY OF BOONE
MISSOURI
PUBLIC WORKS
CONCRETE SWALE
(Flat-Bottom Type)
530.02

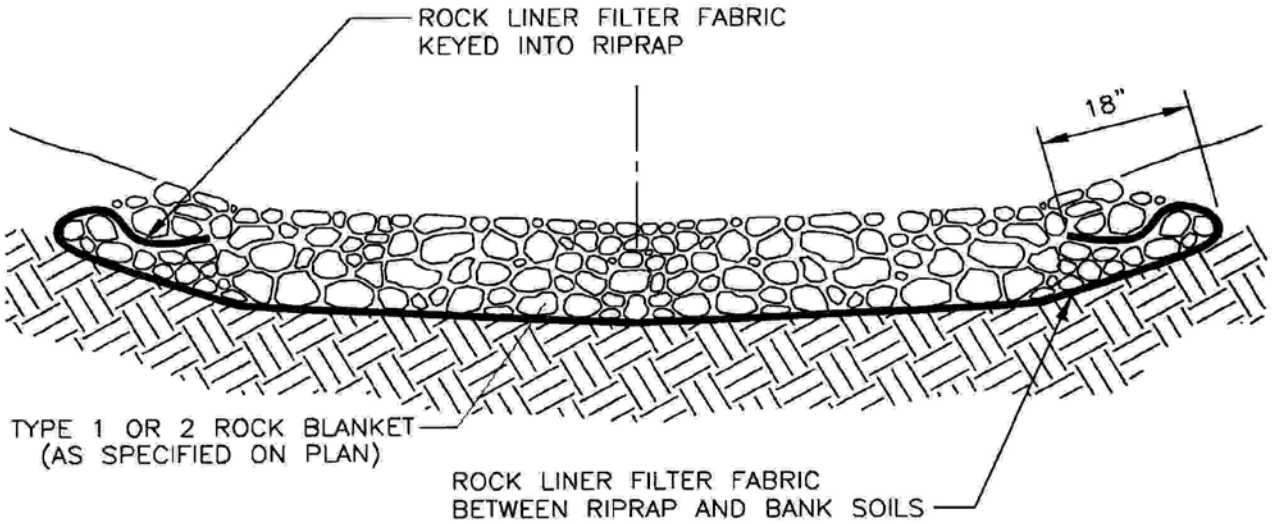

NOTE:

1. ROCK LINER FILTER FABRIC SHALL CONSIST OF A NON-WOVEN, POLYPROPYLENE TYPE FABRIC SUCH AS: AMOCO 4553 NON-WOVEN GEOTEXTILE FABRIC OR APPROVED EQUAL.

DWM Approved	02/19/02 Date	COUNTY OF BOONE MISSOURI PUBLIC WORKS	RIP RAP W / FILTER FABRIC	530.03
Revisions				

Appendix C
Street Cuts (Utilities & Others)

1.1 **General Information** - All persons desiring to make cuts in or across any city street or rights of way must make application to obtain a Right of Use Permit from the Director prior to making said cut.

1.2 **Approval Authority** - The Director shall approve all activities affecting public streets or safety within city right of way. Such activities shall include, but not be limited to: utility relocation within the right of way, utility maintenance within right of way, and construction of culverts for private drives. The Director shall be notified no less than 21 days in advance of the proposed construction and detailed plans submitted. The Director will review applicants' plans and respond within 2 weeks or such time as might reasonably be required. Upon approval of plan, a Right of Way Work Permit shall be issued. The permittee shall be held accountable for any maintenance required on the repaired or restored sections for twelve (12) months following the completion of work. A bond may be collected by the Director to insure above conditions are met.

1.3 **Methods and Repair** – All paved surfaced streetways, gravel surface streetways with an ADT of over 400 and critically viewed streetways will require the boring method. The Director in individual cases may waive this requirement. Any approved plan that calls for cutting and/or removal of paved surface shall repair pavement according to specifications, which are shown on **Appendix B-1, Drawing 120.01**. Sites shall be inspected by a city inspector immediately prior to and following the pouring or laying of pavement surface for repairs.

1.4 **Depth Specifications** - All underground water line installations within the street right-of-way shall have a minimum cover of 42 inches. All other underground installations shall have a minimum cover of 30 inches except under the street surface where the minimum depth shall be 24 inches. City shall not be responsible to any permittee for payment of the cost of damages or repair of any utility facilities not installed in accordance with these specifications.

1.5 **Additional Requirements** - Street ditches, culverts, and other devices used to carry surface run-off shall be kept open, free and clear at all times. Construction signing shall be as required and consistent with the Manual on Uniform Traffic Control Devices (MUTCD). All disturbed areas shall be seeded and mulched to the satisfaction of the Director. All work shall be performed expediently and in a workmanlike manner.

Appendix D
Street Plan Submittal Checklist

Before street plans are submitted to the Director, a Concept Review Meeting shall be held as outlined in the City Subdivision Regulations.

Survey Requirements:

1. Field survey the project area to the level of detail necessary for proper preparation of plans. Horizontal and vertical control monuments sufficient for construction of the project shall be placed on the site.
2. Locate sufficient land corner and property boundary markers and other data to identify the location of the project relative to the property boundary.
3. Contact all utilities of record to request location of their on-site facilities.
4. All property monuments shall be preserved or replaced in accordance with the current Missouri Minimum Standards for Property Boundary Surveys.

Plan Requirements:

- ❑ Provide five (5) complete sets of plans.
- ❑ Sheet size shall be 24” x 36”.
- ❑ Engineer shall sign and seal each page of the plans. North arrow shall be shown where appropriate.
- ❑ Cover Sheet shall include name, address and telephone number of owner/developer, name of development,
- ❑ Site and vicinity map, sheet index, legend of line types and symbols, general notes.
- ❑ Key Map Sheet shall include, but is not necessarily limited to, complete layout of proposed project, R.O.W. limitations, centerline stationing, property lines, lot numbers/address, owners name and reference match to plan and profile sheets.
- ❑ Plan and Profile Sheets shall be drawn to a horizontal scale of 1” = 40’ (typical) and drawn to a vertical scale of 1” = 5’ (typical). Boone City Director reserves the right to require a revised scale for clarification purposes. Scale may be adjusted if all required information can be clearly defined.
- ❑ Plan sections shall show existing and proposed utilities, existing and proposed rights of way, existing and proposed street, grading limits, existing and proposed easements, lot lines, lot numbers, pertinent features within fifty (50) feet of proposed improvements, existing and proposed drainage ditches / structures showing direction of flow, location of driveway and sidewalks on corner lots, location of all horizontal and vertical control points.
- ❑ Profile section shall show existing centerline grade as a dashed line and proposed centerline grade as a solid line, grades on tangents, vertical curve data: length, PVI, PVC, PVT, k-value, elevations of all underground utilities.
- ❑ Cross-sections shall be drawn to a scale that clearly shows existing and proposed topography and grading limits at the beginning and end of each alignment, at each proposed pipe within the right of way, at each existing or proposed driveway, and at intervals of fifty (50) feet with existing and proposed centerline elevations labeled for non curb & guttered streets where ditches are not going to be utilized and for existing streets that are being upgraded.

Construction Detail Sheet shall show details and specifications of all drainage structures, typical street cross-section, applicable shop-drawings, and other pertinent details as necessary.

- Erosion Control Sheet shall show details of all erosion control measures such as ditch checks, silt fences, erosion control fabric, etc. required for the project.
  See Appendix A, Section 1.9.
- Traffic Control Sheet shall show location and type of all temporary and permanent traffic control measures such as temporary construction signs, stop signs, ID/name signs and any temporary closing of public streets due to construction, any re-routing of traffic, etc. necessary for the safe passage of traffic during the construction of the project. All Permanent Traffic Control Measures shall be consistent with the requirements of the Boone City Traffic Manual, adopted July 2002.

Note: Construction Detail Sheet, Erosion Control Sheet, and Traffic Control Sheet may be consolidated if all information is complete and easily legible.

Miscellaneous Submittals:

- List and submit all permits required for execution of project such as Storm Water Permit, Land Disturbance Permit, Wetlands Permit, Cultural Permit, MoDot Permit, etc.
- Copy of approved preliminary plat.
- Copy of final plat, if recorded.
- Complete construction cost estimate at current prevailing wage rates.

APPENDIX E

CHECKLIST FOR SITE PLAN MAP PREPARATION

LOCATION MAP - A small map locating the site in relation to the surrounding areas, road system and receiving streams. Define the watershed boundary.
INDICATE NORTH - Show the direction of north in relation to the site.
SCALE - Indicate scale, using a graduated line, which represents the drawn dimensions in relation to actual size of the project site, usually in number of feet per inch.
BENCHMARK - An established elevation affixed to a permanent object which can be used to check grade.

PLAN DRAWING - A drawing of project site, which includes but is not limited to:

Existing Contours -Existing two-foot contours of the site including (at least 200 feet beyond property boundary.)
Final Contours - Proposed changes to the existing contours.
Existing Vegetation - Existing tree lines, grassy areas or unique vegetation.
Soils - Boundaries of different soil types.
Property Boundaries and Lot Lines - Boundaries of the property, lot lines, section lines and adjacent plats.
Elevation and Grade - Elevation of lot corners, grade of streets, parking lots, water levels of ponds, wetlands and lakes, elevation of storm sewer inlets and outlets and elevations of first floor of proposed structures.
Drainage - The dividing lines and the direction of flow for the different drainage areas.
Critical Erosion Areas - Areas with potentially serious erosion problems.
Limit of Clearing and Grading - Indicate all areas which are to be cleared and graded.
Utility - Locations of utilities in the area of the proposed development.
Location of Erosion and Sediment Control Practices - Location of erosion and sediment control and storm water management practices used on the site. Illustrate with detailed drawing.
Structural Practices - Any structural practices used that are not referenced in this handbook or other local handbooks. Explain and illustrate with detailed drawings.

PLAN PREPARER - Include the signature of the individual or agency responsible for implementation and maintenance of erosion, sediment and storm water control measures.
RESPONSIBLE INDIVIDUAL - Include the signature of the individual or agency responsible for implementation and maintenance of erosion, sediment and storm water control measures.

APPENDIX F

1.10 DESIGN CRITERIA FOR STORM WATER DRAINAGE FACILITIES (1.10 of Appendix A)

SECTION 1 INTRODUCTION

1.01 Purpose

The purpose of this manual is to establish standard methods and principals for the design and construction of surface collection and drainage systems, storm water detention and retention systems and erosion control systems within the City of Ashland, Missouri. The design factors, formulae, graphs, and procedures are intended for use as engineering guides in the solution of drainage problems involving determination of quantity, rate of flow, method of collection, storage, conveyance, disposal of storm water, and erosion control.

This manual is intended primarily for the use of developers and their engineers in the design of storm drainage management systems. These management systems consist of and include storm drains, small culverts, street and gutter flow, hydraulics, inlets, junction boxes, natural drainage swales, detention and retention facilities, and erosion control facilities.

1.02 Scope

This manual represents the application of accepted principals of surface drainage engineering and is a working supplement to basic information obtainable from standard drainage handbooks and other publications on drainage. It is presented in a format that gives logical development of solutions to the problems of storm drainage and urbanization.

SECTION 2 DETERMINATION OF STORM RUNOFF

2.01 GENERAL

It has long been recognized that urban development has a pronounced effect on the rate of runoff from a given rainfall. The hydraulic efficiency of a drainage area is generally improved by urbanization, which in effect reduces the storage capacity and is a direct result of the elimination of porous surfaces, small ponds, and holding areas. This comes about by the grading and paving of building sites, streets, drives, parking lots, and sidewalks and by construction of buildings and other facilities characteristic of urban development.

When analyzing an area for design purposes, urbanization of the full watershed shall be assumed. Zoning maps, land use plans, and master plans should be used as aids in establishing the anticipated surface character of the ultimate development. The selection of design runoff coefficients and/or percent impervious cover factors, which are explained in the following discussions of runoff calculation, must be based upon the assumed future urbanization of the complete watershed.

Numerous methods of runoff computation are available on which the design of storm drainage and flood control systems may be based. Storm drainage facilities for residential subdivisions and small commercial or industrial developments should generally be designed

on the basis of discharges calculated by the Rational Formula if tributary areas are less than 200 acres. For tributary areas larger than 200 acres, it will be necessary to use other design techniques, such as the SCS method, or the USGS urban or rural regression equations.

2.02 RATIONAL METHOD

The Rational Method is based on the direct relationship between rainfall and runoff, and is expressed by the following equation:

$$Q = kCiA$$

where,

Q = is defined as the peak rate of runoff in cubic feet per second (CFS)

k = 1.008; a constant converting acres and inches per hour of rainfall to CFS; for the purpose of this manual k shall be taken as unity.

C = The coefficient of runoff representing the ratio of direct runoff to rainfall.

i = The average intensity of rainfall in inches per hour for a period of time equal to the critical time of flow of the drainage area to the point under consideration (in/hr).

A = drainage area of the watershed (acres)

Basic assumptions associated with the rational method:

1. The maximum runoff rate occurs when the rainfall intensity lasts as long or longer than the time of concentration.
2. The frequency of the discharge is the same as that of the rainfall intensity.
3. The fraction of the rainfall that becomes runoff is independent of the rainfall intensity or volume.

The first assumption implies that a homogeneous rainfall event is applied uniformly to the entire drainage area, and may not be valid for larger watersheds where constant rainfalls of high intensity do not occur simultaneously over the entire watershed. This assumption also provides the basis for using the watershed's time of concentration as the duration of the design storm. The second assumption again limits the size of the drainage area because for larger basins, factors other than rainfall frequency can play a large role in determining the flood frequency. Finally, the third assumption is reasonable for highly impervious areas, but less reasonable for pervious areas where the antecedent moisture condition plays a large role in determining the amount of rainfall that becomes surface runoff. For these reasons, use of the Rational Method is limited to small watersheds.

A. RUNOFF COEFFICIENT (C)

<u>Nature of Surface.</u>

The proportion of the total rainfall that will reach the storm drains depends on the relative porosity or imperviousness of the surface, and the slope and ponding characteristics of the surface. Impervious surfaces such as asphalt pavements and the roofs of buildings, will be subject to nearly 100 percent runoff, regardless of the slope, after the surfaces have become thoroughly wet. On site inspections and aerial photographs may prove valuable in estimating the nature of the surface within the drainage area.

Soil.

The runoff coefficient "C" in the Rational Formula is also dependent on the character of the soil. The type and condition of the soil determines its ability to absorb precipitation. The rate at which a soil absorbs precipitation generally decreases as and if the rainfall continues for an extended period of time. The soil absorption or infiltration rate is also influenced by the presence of soil moisture before a rain (antecedent precipitation), the rainfall intensity, the proximity of the ground water table, the degree of soil compaction, the porosity of the subsoil, vegetation, ground slopes, depressions, and storage.

Runoff Coefficient.

It should be noted that the runoff coefficient "C" is the variable of the Rational Method, which is least susceptible to precise determination. Proper use requires judgement and experience on the part of the Engineer, and its use in the formula implies a fixed ratio for any given drainage area, which in reality is not the case. A reasonable coefficient must be chosen to represent the integrated effects of infiltration, detention storage, evaporation, flow routing, and interception, all of which affect the time distribution and peak rate of runoff.

Table C-1 present recommended ranges for "C" values.

It is often desirable to develop a composite runoff coefficient based in part on the percentage of different types of surfaces in the drainage area. This procedure is often applied to typical "sample" blocks as a guide to selection of reasonable values of the coefficient for an entire area. Suggested coefficients with respect to surface types are given in Table C-2.

It should be noted that the runoff coefficient values given in Tables C-1 and C-2 have generally been derived for storms of 10 to 25 year frequency, and have been extended to the 100 year frequency.

B. TIME OF CONCENTRATION.

In order to determine the rainfall intensity used in the Rational Method, the time of concentration of the watershed must be estimated. The time of concentration of a watershed is defined as the time required for water to travel from the most hydraulically distant point of the watershed to the watershed outlet. This is also the time required before the entire watershed begins to contribute flow to the watershed outlet. This characteristic response time of the watershed is used as the duration of the design storm and thus influences the value of rainfall intensity used in the Rational Method. Note that the location of the most hydraulically distant point in the watershed is a function of travel time and depends on both velocity and distance. The point in the watershed used to

determine time of concentration may not necessarily be the point furthest from the watershed outlet. There may be as many as three distinct flow regimes in the watershed contributing to the time of concentration, including overland or sheet flow, ditch or channel flow, and storm sewer flow. For small rural watersheds, all flow regimes may be combined into a single equation used to calculate time of concentration.

The Kirpich equation is used for these watersheds:

$$t_c = KL^{0.77} S^{-0.385}$$

C. RAINFALL INTENSITY**.** The design rainfall intensity is a function of the storm duration, the design frequency and the geographic location. The storm duration is taken as the time of concentration of the watershed or five minutes, whichever is greater. Knowing the storm duration and the design frequency, the rainfall intensity may be read from the appropriate Intensity-Duration-Frequency Figure C-1. For urban areas as defined in the CATSO area, use Figure C-8.

D. DRAINAGE AREA (A)

The drainage area (A) is the only parameter in the rational formula which is subject to accurate determination and represents the total area tributary to any point under consideration for which runoff is being determined. A current topographic map with a scale of not less than 1" = 200 ft., and a maximum contour interval of five feet should be obtained or prepared for use in drainage area calculations.

SECTION 3 FLOW IN STREETS

3.01 GENERAL

The location of inlets and permissible flow of water in the streets should be related to the extent and frequency of interference to traffic and the likelihood of flood damage to surrounding property. Interference to traffic is regulated by design limits of the spread of water into traffic lanes, especially in regard to arterials.

A. Interference Due to Flow in Streets

Water which flows in a street, whether from rainfall directly onto the pavement surface or overland flow entering from adjacent land areas, will flow in the gutters of a street until it reaches an outlet point, such as a storm sewer inlet. As the flow progresses downhill and additional areas contribute to the runoff, the width of flow or spread will increase and progressively encroach into the traffic lane. On streets where parking is not permitted, as with many arterial streets and streets within certain planned developments, flow widths exceeding a few feet become a traffic hazard. Field observations show that vehicles will crowd adjacent lanes to avoid curb flow.

As the width of flow increases further it becomes impossible for vehicles to operate without moving through water. Splash from vehicles tends to obscure the vision of drivers. Eventually, if width and depth of flow become great enough, the street loses its effectiveness as a traffic-carrier. During these periods, it is imperative that emergency vehicles be able to move along the crown of the street.

B. Interference Due to Ponding

Storm runoff that is ponded on the street surface because of grade changes, the crown slope of intersecting streets, or inlets has a substantial effect on the street carrying capacity. Because of the localized nature of ponding, vehicles moving at a relatively high speed may enter a ponded area. The manner in which ponded water affects traffic essentially the same as for curb flow, that is, the width of spread into the traffic lane is critical. Ponding in streets has the added hazard of surprise to drivers of vehicles, producing erratic and potentially dangerous response.

C. Interference Due to Water Flowing Across Traffic Lane

Whenever storm runoff, other than limited sheet flow, moves across a traffic lane, a serious and dangerous impediment to traffic flow occurs. The cross-flow may be caused by super elevation of a curve, a street intersection, overflow from the higher gutter on a street with crossfall, or simply a poor street design. The problem associated with this type of flow is the same as for ponding in that it is localized in nature. Vehicles may be travelling at high speed when they reach the location. If vehicular movement is slow and the street is lightly travelled, as on residential streets, limited cross flows do not cause sufficient interference to be unacceptable.

The depth and velocity of cross flows shall be maintained within such limits that they will not have sufficient force to threaten moving traffic.

3.02 PERMISSIBLE SPREAD OF WATER

A. Arterial Streets

Inlets shall be spaced at such an interval as to provide one clear lane of traffic in each direction during the peak flows of a design storm having a 25-year return frequency. Two lanes of traffic being defined as 20 feet in width, being 10 feet on either side of the crown.

B. Collector Streets

Inlets shall be spaced at such an interval as to provide one clear lane of traffic having a minimum width of 12 feet during the peak flows of a design storm having a 25-year frequency.

C. Local Streets

Inlets shall be spaced at such an interval as to provide one clear lane of traffic having a minimum width of 10 feet during the peak flows of a design storm having a 10-year frequency.

3.03 DESIGN METHOD

A graph for calculating gutter flows for the City's standard residential street with a four-inch parabolic crown is provided in Exhibit C (Figure C-4). Figure C-4 may also be used for other streets with parabolic cross sections. For streets with non-parabolic cross sections, another graph (Figure C-6) is provided for two per cent cross slope to simplify the calculations for maximum gutter depth and gutter flows. Figures C-4 through C-7 are based upon the use of the City's standard barrier curb design. The use of roll-back curbs will require the designer to provide calculations verifying that the requirements of 3.02 are met.

SECTION 4 STORM DRAIN INLETS

4.01 GENERAL

The primary purpose of storm drain inlets is to intercept excess surface runoff and deposit it in a drainage system, thereby reducing the possibility of surface flooding.

The most common location for inlets is in streets, which collect and channelize surface flow making it convenient to intercept. Because the primary purpose of streets is to carry vehicular traffic, inlets must be designed so as to not conflict with that purpose. The following guidelines shall be used in the design of inlets to be located in streets.

A. Inlet design and location must be compatible with the criteria established in Section 3.
B. Design and location of inlets shall take bicycle and pedestrian traffic into consideration.
C. Additional recession or modification of the depression shall be considered when a traffic lane abuts the curb line.
D. When sidewalks abut the inlet they shall be tied with rebar, and shall be designed to maintain the full walk width.

4.02 INLET DESIGN

Spacing and location of inlets shall be such that the maximum allowable depth of gutter flow is not exceeded. Inlet capacity is a function of inlet configuration, street cross-slope, street longitudinal slope, and depth of gutter flow. Inlet capacity ordinarily should not be less than the quantity flow tributary to the inlet. Inlets at low points should have extra capacity as a safeguard against flooding because of possibility of flows in excess of the design flow or clogging by debris. Inlets should be placed at other than low points in addition to low points when curb capacities are exceeded.

City standard inlets are shown on Figure C-9. Appropriate uses for each type of inlet are summarized in Table 1.

TABLE 1

SUMMARY OF CITY STANDARD STORM INLETS

Type of Inlet	Street or Gutter Longitudinal Slope	Capacity Curve	Capacity Reduction Factor
Curb Inlet:			
Type "M"	Zero (sump)	Fig. C-10	0.80
	Up to 4%	Fig. C-11	0.80
Type "M" w/gutter deflector	Greater than 4%	Fig. C-11	0.80

Inlet capacities may be determined by the use of the theoretical inlet capacity curves in Exhibit C. Theoretical inlet capacities obtained from the capacity curves must be multiplied by the appropriate capacity reduction factor listed in the above table. The capacity reduction factor compensates for partial clogging of inlets by debris. When inlets are placed in a sump, spread should be checked at each of the throat transitions as well as directly in front of the inlet.

SECTION 5 FLOW IN STORM DRAINS AND THEIR APPURTENANCES.

5.01 GENERAL

A general description of storm drainage systems and quantities of storm runoff is in Section 2. It is the purpose of this section to consider the significance of the hydraulic elements of storm drains and their appurtenances to a storm drainage system.

Hydraulically, storm drainage systems are conduits (open or enclosed) in which unsteady and non-uniform free flow exists. Storm drains accordingly are designed for open-channel flow to satisfy to the extent possible the requirements for unsteady and non-uniform flow. Steady flow conditions may or may not be uniform.

5.02 VELOCITIES AND GRADES

A. Minimum Grades.

Storm drains should operate with velocities of flow sufficient to prevent excessive deposition of solid material, otherwise objectionable clogging may result. The controlling velocity is near the bottom of the conduit and considerably less than the mean velocity. Storm drains shall be designed to have a minimum mean velocity flowing full of 2.5 fps, which is considered to be the lower limit of scouring velocity. The minimum slope for standard construction procedures shall be 0.40%.

B. Maximum Velocities.

Maximum velocities in conduits are important mainly because of the possibilities of excessive erosion of the storm drain inverts. The maximum allowable velocity for storm drainage conduits shall be 15 fps.

C. Minimum Diameter.

Pipe which are to become an integral part of the public storm sewer system shall have a minimum diameter of 15 inches, and 18 inches under pavement.

5.03 MATERIALS

A. See Section 260 in Appendix A

5.04 FULL OR PART FULL FLOW IN STORM DRAINS

A. General

All storm drains shall be designed by the application of the continuity equation and Mannings Equation, either through the appropriate charts and nomographs or by direct solutions of the equations as follows:

$Q = AV$, and

$$Q = \frac{1.49\ AR^{2/3}Sf^{1/2}}{n}$$

Q = Pipe Flow (cfs)

A = Cross-sectional area of pipe (ft.^{2})

V = Velocity of flow (fps)

n = Coefficient of roughness of pipe

R = Hydraulic radius - A/W_p (ft.)

S_1 = Friction slope in pipe (ft./ft.)

W_p = Wetted perimeter (ft.)

There are several general rules to be observed when designing storm sewer runs. When followed they will tend to alleviate or eliminate the common mistakes made in storm sewer design. These rules are as follows:

1. Select pipe size and slope so that the velocity of flow will increase progressively, or at least will not appreciably decrease, at inlets, bends, or other changes in geometry or configuration.

2. Do not discharge the contents of a larger pipe into a smaller one, even though the capacity of the smaller pipe may be greater due to steeper slope.

3. At changes in pipe size match the soffits of the two pipes at the same level rather than matching the flow lines.

4. Conduits are to be checked at the time of their design with reference to critical slope.

   If the slope on the line is greater than critical slope, the unit will likely be operating under entrance control instead of the originally assumed normal flow. Conduit slope should be kept below critical slope if at all possible. This also removes the possibility of a hydraulic jump within the line.

B. Pipe Flow Charts

Figures C-2, C-3 and C-16 are nomographs for determining flow properties in circular pipe. The nomographs are based upon a value of "n" of 0.015 for concrete and 0.025 for corrugated metal pipe.

5.05 HYDRAULIC GRADIENT AND PROFILE OF STORM DRAIN

In storm drain systems flowing full, all losses of energy through resistance of flow in pipes, by changes of momentum or by interference with flow patterns at junctions, must be accounted for by the accumulative head losses along the system from its initial upstream inlet to its outlet. The purpose of accurate determinations of head losses at junctions is to include these values in a progressive calculation of the hydraulic gradient along the storm drain system. In this way, it is possible to determine the water surface elevation, which will exist at each structure.

While a check of the system by development of a hydraulic grade line requires minimum additional design time when utilizing an automated design process, a manual procedure can be very time consuming. Therefore, the designer must evaluate and justify the need for a hydraulic grade line check of a system on a case by case basis. Conditions that may warrant undertaking this additional design analysis are:

1. Systems with outlets that are subject to high tailwater conditions
2. Systems that transition from a steep to a flat gradient
3. Systems on flat gradient that have substantial junction and/or bend loses.

The maximum hydraulic grade line elevation shall be six inches (6”) below the lowest level of any inlet opening or twelve inches (12”) below the rim of a junction box or manhole.

5.06 MANHOLE LOCATION

Manholes shall be located at intervals not to exceed 400 feet for pipe 30 inches in diameter or smaller. Manholes shall preferably be located at street intersections, conduit junctions, changes of grade and changes of alignment.

Manholes for pipe greater than 30 inches in diameter shall be located at points where design indicates entrance into the conduit is desirable; however, in no case shall the distance between openings or entrances be greater than 600 feet.

5.07 PIPE CONNECTIONS

Prefabricated wye and tee connections may be utilized provided at least one of the pipes is greater than 30 inches in diameter.

5.08 MINOR HEAD LOSSES AT STRUCTURES

The following total energy head losses at structures shall be determined for inlets, manholes, wye branches or bends in the design of closed conduits. See figures C-12 and C-13 for details of each case. Minimum head loss used at any structure shall be 0.10 foot, unless otherwise approved.

The basic equation for most cases, where there are both upstream and downstream velocity, takes the form as set forth below with the various conditions of the coefficient K_j shown in Tables C-5.

$$h_j = \frac{V_2^2 - K_j V_1^2}{2g}$$

h_j = Junction or structure head loss in feet.

v_1 = Velocity in upstream pipe in fps.

v_2 = Velocity in downstream pipe in fps.

K_j = Junction or structure coefficient of loss.

In the case where the initial velocity is negligible the equation for head loss becomes:

$$h_g = \frac{K_j V_2^2}{g}$$

Pipe shall be installed in a straight line and grade for all pipes 30 inches in diameter and smaller.

Short radius bends may be used on 33 inch and larger pipes when flow must undergo a direction change at a junction or bend. Reductions in head loss at manholes may be realized in this way. A manhole shall always be located at the end of such short radius bends.

The values of the coefficient "K_j" for determining the loss of head due to sudden enlargements and sudden contractions in pipes are shown in Table C-5 and the coefficients are used in the following equation to calculate the head loss at the change in section:

$$h_j = \frac{K_j V^2}{2g}$$ where v = velocity in smaller pipe

5.09 UTILITIES

In the design of a storm drainage system, the engineer is frequently confronted with the problem of grade conflict between the proposed storm drain and existing utilities such as water, gas and sanitary sewer lines.

When conflicts arise between a proposed drainage system and a utility system, the owner of the utility system shall be contacted and made aware of the conflict. Any adjustments necessary to either the drainage system or the utility can then be determined.

SECTION 6 DESIGN OF ENCLOSED STORM DRAINAGE SYSTEMS

6.01 GENERAL

All storm drains shall be designed by the application of the Manning Equation either directly or through appropriate charts or nomographs. In the preparation of hydraulic designs, a thorough investigation shall be made of all existing structures and their performance on the waterway in question.

The design of a storm drainage system should be governed by the following six conditions:

A. The system must accommodate all surface runoff resulting from the selected design storm without serious damage to physical facilities or substantial interruption of normal traffic.

B. Runoff resulting from storms exceeding the design storm must be anticipated and disposed of with minimum damage to physical facilities and minimum interruption of normal traffic.

C. The storm drainage system must have a maximum reliability of operation.

D. The construction costs of the system must be reasonable with relationship to the importance of the facilities it protects.

E. The storm drainage system must require minimum maintenance and must be accessible for maintenance operations.

F. The storm drainage system must be adaptable to future expansion with minimum additional cost.

An example of the design of a storm drainage system is outlined in Paragraphs 6.03 and 6.04. The design theory has been presented in the preceding sections with corresponding tables and graphs of information.

6.02 PRELIMINARY DESIGN CONSIDERATIONS

Careful planning of storm drainage systems in the preliminary design phase offers the greatest potential for cost savings and for compliance with storm drainage objectives. The best time to prepare conceptual layouts of storm drainage systems is prior to finalization of street layout, easement location, and site grading. Options available to the drainage engineer are greatly reduced once surface characteristics of the drainage basin have been set.

In storm drainage system design, a significant part of the construction cost is represented by small diameter storm drains. The longer that overland flow can be kept from reaching the street network, the further the distance from the ridge line that the storm drain system need begin, and the fewer the number of inlets that will be required. Various layout concepts should be developed and analyzed prior to selection of a final concept for detailed design.

A. Prepare a drainage map of the entire area to be drained by proposed improvements. Contour maps serve as excellent drainage area maps when supplemented by field reconnaissance.

B. Make a tentative layout of the proposed storm drainage system, locating all inlets, manholes, mains, laterals, ditches, culverts, etc.

C. Outline the drainage area for each inlet in accordance with present and future street development.

D. Indicate on each drainage area the size of area, the direction of surface runoff by small arrows, and the coefficient of runoff for the area.

E. Show all existing underground utilities.

F. Establish design rainfall frequency.

G. Establish minimum inlet time of concentration.

H. Establish the typical cross section of each street.

I. Establish permissible spread of water on all streets within the drainage area.

J. Include A. through I. with plans submitted to the Engineering Department for review. The drainage map submitted shall be suitable for permanent filing in the Engineering Department and shall be a good quality reproducible.

6.03 INLET SYSTEM

Determining the size and location of inlets is largely a trial and error procedure. Using criteria outlined in sections 2, 3, and 4 of this manual, the following steps will serve as a guide to the procedure to be used.

A. Beginning at the upstream end of the project drainage basin, outline a trial sub-area and calculate the runoff from it.

B. Compare the calculated runoff to allowable street capacity. If the calculated runoff is greater than the allowable street capacity, reduce the size of the trial sub-area. If the calculated runoff is less than the allowable street capacity, increase the size of the trial sub-area. Repeat this procedure until the calculated runoff equals the allowable street capacity. This is the first point at which a portion of the flow must be removed from the street. The percentage of flow to be removed will depend on street capacities versus runoff entering the street downstream.

C. Record the drainage area, time of concentration, runoff coefficient and calculated runoff for the sub-area. This information shall be recorded on the plans or in tabular form convenient for review.

D. If an inlet is to be used to remove water from the street, size the inlet (inlets) and record the inlet size, amount of intercepted flow, and amount of flow carried over (bypassing the inlet).

E. Continue the above procedure for other subareas until a complete system of inlets has been established. Remember to account for carry-over from one inlet to the next.

F. After a complete system of inlets has been established, modification should be made to accommodate special situations such as point sources of large quantities of runoff, and variation of street alignments and grades.

G. Record information as in C. and D. for all inlets.

H. After the inlets have been located and sized the inlet pipes can be designed.

I. Inlet pipes are sized to carry the volume of water intercepted by the inlet. Inlet pipe capacities may be controlled by the gradient available, or by entry condition into the pipe at the inlet. Inlet pipe sizes should be determined for both conditions and the larger size thus determined used.

6.04 STORM SEWER SYSTEM

After the computation of the quantity of storm runoff entering each inlet, the storm sewer system required to carry off the runoff is designed. It should be borne in mind that the quantity of flow to be carried by any particular section of the storm sewer system is not the sum of the inlet design quantities of all inlets above that section of the system, but is less than the straight total. This situation is due to the fact that as the time of concentration increases the rainfall intensity decreases.

A. Storm Sewer Pipe

The ground line profile is now used in conjunction with the previous runoff calculations. The elevation of the hydraulic gradient is arbitrarily established approximately two (2) feet below the ground surface. When this tentative gradient is set and the design discharge is determined, a Manning flow chart may be used to determine the pipe size and velocity.

It is probable that the tentative gradient will have to be adjusted at this point since the intersection of the discharge and the slope on the chart will likely occur between standard pipe sizes. The smaller pipe should be used if the design discharge and corresponding slope does not result in an encroachment on the six (6) inch criteria below the inlet opening. If there is encroachment, use the larger pipe, which will establish a capacity somewhat in excess of the design discharge. Velocities can be read directly from a Manning Flow Chart based on a given discharge, pipe size and gradient slope (Figures C-2 and C-3).

B. Junctions, Inlets and Manholes

1. Determine the hydraulic gradient elevations at the upstream end and downstream end of the pipe section in question. The elevation of the hydraulic gradient of the upstream end of pipe is equal to the elevation of the downstream (hydraulic gradient) plus the product of the length of pipe and the pipe gradient.

2. Determine the velocity of flow for incoming pipe (main line) at junction, inlet or manhole at design point.

3. Determine the velocity of flow for outgoing pipe (main line) at junction, inlet or manhole at design point.

4. Compute velocity head for outgoing velocity (main line) at junction, inlet, or manhole at design point.

5. Compute velocity head for incoming velocity (main line) at junction, inlet, or manhole at design point.

6. Determine head loss coefficient "k" at junction, inlet, or manhole at design point from Table C-5 or Figure C-12, C-13.

7. Compute head loss at junction, inlet or manhole.

$$h_j = \frac{V_2^2 - K_j V_1^2}{2g}$$

8. Compute hydraulic gradient at upstream end of junction as if junction were not there.

9. Add head loss to hydraulic gradient elevation determined to obtain hydraulic gradient elevation at upstream end of junction.

All information shall be recorded on the plans or in tabular form convenient for review.

SECTION 7 FLOW IN OPEN CHANNELS

7.01 GENERAL

Open channels for use in the major drainage system have significant advantage in regard to cost, capacity, multiple use for recreational and aesthetic purposes, and potential for detention storage. Disadvantages include right-of-way needs and maintenance costs. Careful planning and design are needed to minimize the disadvantages, and to increase the benefits.

The ideal channel is a natural one carved by nature over a long period of time. The benefits of such a channel are that:

A. Velocities are usually low, resulting in long concentration times and lower downstream peak flows.

B. Channel storage tends to decrease peak flows.

C. Maintenance needs are usually low because the channel is somewhat stabilized.

D. The channel provides a desirable green belt and recreational area adding significant social benefits.

Generally speaking, the natural channel or the man-made channel, which most nearly conforms to the character of a natural channel is the most efficient and the most desirable.

In many areas facing urbanization, the runoff has been so minimal that natural channels do not exist. However, small trickle paths nearly always exist which provide an excellent basis for location and construction of channels. Good land planning should reflect even these minimal trickle channels to reduce development costs and minimize drainage problems. In some cases the prudent utilization of natural water routes in the development of a major drainage system will reduce the requirements for an underground storm sewer system.

Channel stability is a well-recognized problem in urban hydrology because of the significant increase in low flows and peak storm runoff flows. A natural channel must be studied to determine the measures needed to avoid future bottom scour and bank cutting. Erosion control measures can be taken at reasonable cost, which will preserve the natural appearance without sacrificing hydraulic efficiency.

7.02 CHANNEL DISCHARGE

A. Manning's Equation

Careful attention must be given to the design of drainage channels to assure adequate capacity and minimum maintenance to overcome the results of erosion and silting. The hydraulic characteristics of channels shall be determined by Manning's equation.

$$Q = \frac{1.49}{} \; A \; R^{2/3} S^{1/2}$$

n

Q = Total discharge in cfs

n = Coefficient of roughness

A = Cross-sectional area of channel in sq. ft.

R = Hydraulic radius of channel in feet, cross sectional area of outflow divided by the wetted perimeter A/P.

S = Slope of the frictional gradient in feet per foot.

B. Uniform Flow

For a given channel condition of roughness, discharge, and slope, there is only one possible depth for maintaining a uniform flow. This depth is the normal depth. When roughness, depth, and slope are known at a channel section, there can only be one discharge for maintaining a uniform flow through the section. This discharge is the normal discharge.

If the channel is uniform and resistance and gravity forces are in exact balance, the water surface will be parallel to the bottom of the channel. This is the condition of uniform flow.

Uniform flow is more often a theoretical abstraction than an actuality. True uniform flow is difficult to find in the field or to obtain in the laboratory. Channels are sometimes designed on the assumption that they will carry uniform flow at the normal depths, but because of conditions difficult if not impossible to evaluate and hence not taken into account, the flow will actually have depths considerably different from uniform depth. The engineer must be aware of the fact that uniform flow computation provides only an approximation of what will occur; however, such computations are useful and necessary for planning.

C. Normal Depth

The normal depth is computed so frequently that it is convenient to use nomographs for various types of cross sections to eliminate the need for trial and error solutions, which are time consuming. A nomograph for uniform flow is given in Figure C-14.

D. Critical Depth

For a channel cross section with a specified discharge, Q, uniform flow may occur at critical depth, at less than critical depth, or at more than critical depth, depending on the channel slope. Flow at or near critical depth, dc, is highly unstable and channel sections giving the depth of flow near the critical depth should be avoided. Subcritical velocity will prevail at normal depths greater than the critical depth and will occur on mild slopes. Supercritical velocity will prevail at normal depths less than the critical depth, and will occur on steep slopes.

Critical flow is characterized by a Froude number, F, equal to unity. If F is less than 1.0, the flow is subcritical and if F is greater than 1.0, the flow is supercritical. The Froude number, F, is defined as:

$$F = \frac{V}{g\, d_m}$$

in which:

V = velocity, in feet per second

g = gravitational constant, 32.2 feet per second squared

d_m = hydraulic depth A/b_w

where:

b_w = width of water surface

A = cross-sectional area of flow.

Flow that passes from supercritical to sub-critical may result in a hydraulic jump and should always be investigated for potential problems.

It is rare that uniform flow will occur in all reaches of a channel. There will normally be interconnected reaches of uniform and non-uniform flow. The determination of water surface profiles for a given discharge in the area of non-uniform flow may be necessary to ensure against extensive property damages. Computations should begin at a known point and extend upstream for sub-critical flow and downstream for supercritical flow.

7.03 WATER SURFACE PROFILES

Open channel flow in urban drainage systems is usually non-uniform because of bridge openings, curves and structures. This necessitates the use of backwater computations for all final channel design work.

A water surface profile must be computed for all channels and shown on all final drawings. Computation of the water surface profile should utilize standard backwater methods or acceptable computer routines, taking into consideration all losses due to changes in velocity, drops, bridge openings and other obstructions. HEC-RAS would be an acceptable computer program for providing this information.

7.04 DESIGN CONSIDERATIONS

Channels should have trapezoidal section of adequate cross-sectional areas to take care of uncertainties in runoff estimates, changes in channel coefficients, channel obstructions and silt accumulations.

Accurate determination of the "n" value is critical in the analysis of the hydraulic characteristics of a channel. The "n" value for each channel reach should be based on experience and judgment with regard to the individual channel characteristics. Table C-7 gives a method of determining the composite roughness coefficient based on actual channel conditions.

Where practicable, unlined channels should have sufficient gradient, depending upon the type of soil, to provide velocities that will be self-cleaning but will not be so great as to create erosion. Lined channels, drop structures, check dams, or concrete spillways may be required to control erosion that results from the high velocities of large volumes of water. Unless approved otherwise by the Director of Public Works, channel velocities in man-made channels shall not exceed 6 fps.

7.05 CHANNEL CROSS SECTIONS

The channel shape may be almost any type suitable to the location and to the environmental conditions. Often the shape can be chosen to suit open space and recreational needs to create additional sociological benefits.

A. Side Slope

Except in horizontal curves the flatter the side slope, the better. Normally slopes shall be no steeper than 3:1, which is also the practical limit for mowing equipment. Rock or concrete lined channels or those which for other reasons do not require slope maintenance may have slopes as steep as 1 ½ :1.

B. Depth

Deep channels are difficult to maintain and can be hazardous. Constructed channels should be as shallow as practical.

C. Bottom Width

Channels with narrow bottoms are difficult to maintain and are conducive to high velocities during high flows. It is desirable to design open channels such that the bottom width is at least twice the depth.

D. Trickle Channels

The low flows, and sometime base flows, from urban areas must be given specific attention. If erosion of the bottom of the channel appears to be a problem, low flows shall be carried if in a paved trickle channel which has a capacity of 5.0 percent of the design peak flow. Care must be taken to insure that low flows enter the trickle channel without the attendant problem of the flow paralleling the trickle channel.

E. Freeboard

For channels with flow at high velocities, the surface roughness, wave action, air bulking, and splash and spray are quite erosive along the top of the flow. Freeboard height should be chosen to provide a suitable safety margin. The height of freeboard shall be a minimum of one foot, or provide an additional capacity of approximately one-third of the design flow. For deep flows with high velocities one may use the formula:

Freeboard (in feet) = $1.0 + 0.025\, v^3 d$, where

v = velocity of flow
d = depth of flow

For the freeboard of a channel on a sharp curve, extra height must be added to the outside bank or wall in the amount:

$$H = \frac{V^2 T}{g R}$$

H = additional height on outside edge of channel (ft.)

V = velocity of flow in channel (fps)

T = width of flow at water surface (ft.)

R = centerline radius of turn (ft.)

g = acceleration of gravity (32.2 ft/sec.^{2})

For channels designed for supercritical flow, additional freeboard may be required depending upon the risk of damage which could occur if flow were to become sub-critical due to debris or other obstructions.

7.06 CHANNEL DROPS

The use of channel drops permit adjustment of channel gradients, which are too steep for the design conditions. In urban drainage work it is often desirable to use several low head drops in lieu of a few higher drops. Special attention must be given to protecting the channel from erosion in the area of channel drops.

The use of sloped drops will generally result in lower cost installations. Sloped drops can easily be designed to fit the channel topography.

Sloped drops shall have roughened faces and shall be no steeper than 2:1. They shall be adequately protected from scour, and shall not cause an upstream water surface drop, which will result in high velocities upstream. Side cutting just downstream from the drop is a common problem, which must be protected against.

The length L will depend upon the hydraulic characteristics of the channel and drop. For a q of 30 cfs/ft., L would be about 15 feet, that is, about 1/2 of the q value. The L should not be less than 10 feet, even for low q values. In addition, follow-up rip-rapping will often be necessary at most drops to more fully protect the banks and channel bottom. The criteria given is minimal, based on the philosophy that it is less costly to initially under protect the riprap, and to place additional protection later after erosional tendencies are determined in the field. Project approvals are to be based on provisions for such follow-up construction.

7.07 BAFFLE CHUTES

Baffle chutes are used to dissipate the energy in the flow at a larger drop. They require no tailwater to be effective. They are particularly useful where the water surface upstream is held at a higher elevation to provide head for filling a side storage pond during peak flows.

Baffle chutes are used in channels where water is to be lowered from one level to another. The baffle piers prevent undue acceleration of the flow as it passes down the chute. Since the flow velocities entering the downstream channel are low, no stilling basin is needed. The chute, on a 2:1 slope or flatter, may be designed to discharge up to 60cfs per foot of width, and the drop may be as high as structurally feasible. The lower end of the chute is constructed to below stream- bed level and backfilled as necessary. Degradation of the stream-bed does not, therefore, adversely affect the performance of the structure. In urban drainage design, the lower end should be protected from the scouring action.

The baffled apron shall be designed for the full design discharge. Baffle chutes shall be designed using acceptable methods such as those presented by A.S. Peterka of the United States Bureau of Reclamation in Engineering monograph No. 25.

SECTION 8 DESIGN OF CULVERTS

8.01 GENERAL

The function of a drainage culvert is to pass the design flow under a streetway, railstreet, or yard area without causing excessive backwater and without creating excessive downstream velocities. The designer shall keep energy losses and discharge velocities within reasonable limits when selecting a structure, which will meet these requirements.

8.02 QUANTITY OF FLOW

The design storm flow shall be computed by the rational method or other approved method as set forth in Section 2 of this manual. The system shall be designed to handle frequency storms as outlined in Table C-4 in the Exhibit.

8.03 HEADWALLS, ENDWALLS, AND END SECTIONS

A. General

The normal function of properly designed headwalls, endwalls, and end sections are to anchor the culvert to prevent movement due to lateral pressures, to control erosion and scour resulting from excessive velocities and turbulence, and to prevent adjacent soil from sloughing into the waterway opening. End sections shall be the same material as the pipe except that corrugated metal end sections may be galvanized metal. Concrete end sections shall have a toewall, either pre-cast or cast in place. All headwalls and endwalls shall be reinforced concrete, and may be either straight parallel headwalls, flared headwalls, or warped headwalls with or without aprons as may be required by site conditions.

B. Conditions at Entrance

It is important to recognize that the operational characteristics of a culvert may be completely changed by the shape or condition at the inlet or entrance. Design of culverts must involve consideration of energy losses that may occur at the entrance. The entrance head losses may be determined by the following equation.

$$h_e = \frac{V_2^2 - K_e V_1^2}{2g}$$

where:

h_e = Entrance head loss in feet

V_2 = Velocity of flow in culvert in fps.

V_1 = Velocity of approach flow in fps.

K_e = Entrance loss coefficient shown in Table C-6

In order to compensate for the retarding effect on the velocity of approach in channels produced by the creation of the headwater pools at culvert entrances, the velocity of the approach in the channel (Va) shall be reduced by the factors below:

Reduction Factors for Approach of Velocity

Velocity of Approach "Va" (fps)	Description of Conditions	V1 to be used in formula for he
0-6	All Culverts	V1 = Va
Above 6	Good alignment of approach channel headwater pool within drainage easement	V1 = 0.5 Va
Above 6	Good alignment of the approach channel; channel slopes have been line; limited backwater pool permissible	V1 = 0

C. Type of Headwall, Endwall, or End Section

In general the following guidelines should be used in the selection of the type of headwall, endwall, or end section.

Parallel (to streetway) Headwall and Endwall

1. Approach velocities are low (below 6 fps).
2. Backwater pools are permitted.
3. Approach channel is undefined.
4. Ample right-of-way or easement is available.
5. Downstream channel protection is not required.

Flared Headwall, Endwall, or End Section

1. Channel is well defined.
2. Approach velocities are between 6 and 10 fps.
3. Medium amount of debris exist.

The wings of flared walls should be located with respect to the direction of the approaching flow instead of the culvert axis.

Warped Headwall and Endwall

1. Channel is well defined and concrete lined.

2. Approach velocities are between 8 and 20 fps.

3. Medium amount of debris exist.

These headwalls are effective with drop down aprons to accelerate flow through culvert, and are effective endwalls for transitioning flow to open channel flow. This type of headwall should be used only where the drainage structure is large and right-of-way or easement is limited.

8.04 CULVERT DISCHARGE VELOCITIES

The velocity of discharge from culverts should be limited as shown below. Consideration must be given to the effect of high velocities, eddies or other turbulence on the natural channel, downstream property and streetway embankment.

Culvert Discharge - Velocity Limitations

Downstream Condition	Maximum Allowable Discharge Velocity (fps)
Erosion Control Blanket	8 fps
Rip-rap Apron	15 fps (**See Appendix B-1, Drawing 530.03)**

8.05 SELECTION OF CULVERT SIZE AND TYPE

A. Culvert Types

Culverts shall be selected based on hydraulic principals, economy of size and shape, and with a resulting headwater depth, which will not cause damage to adjacent property. It is essential to the proper design of a culvert that the conditions under which the culvert will operate are known. Five types of operating conditions are issued below with a discussion of each of the following. See Appendix A for sample calculation procedure and Appendix for sample calculation forms.

Type I Flowing part full, with outlet control and tailwater depth below the critical depth (Figure 8-1).

Type IIFlowing part full with outlet control and tailwater depth above the critical depth (Figure 8-2).

Type III Flowing part full with inlet control (Figure 8-3).

Type IVA Flowing full with submerged outlet (Figure 8-4).

Type IVB Flowing full with partially submerged outlet (Figure 8-5).

Type 1

Culvert Flowing Part Full

With Outlet Control and Tailwater Depth

Below Critical Depth

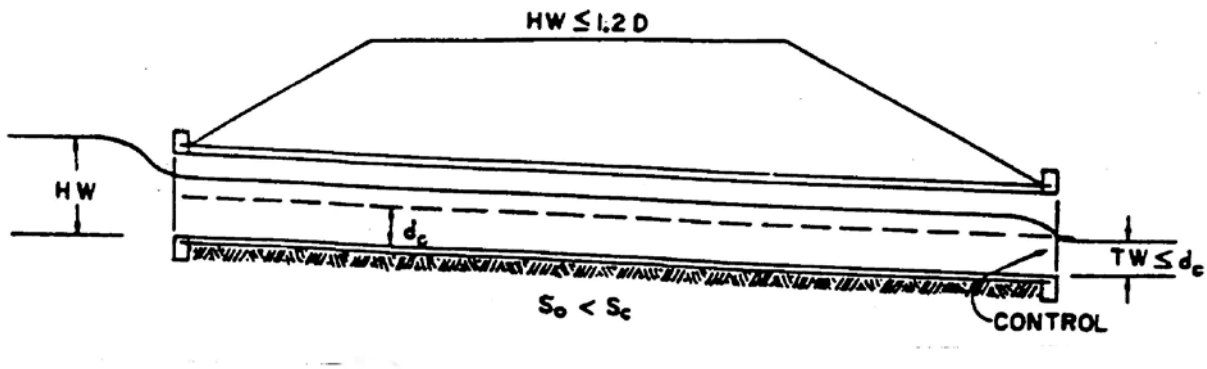

Figure 8-1

Conditions

The entrance is unsubmerged (HW < 1.2D), the slope at design discharge is sub-critical ($S_o < S_c$), and the tailwater is below critical depth (TW < d_c).

The above condition is a common occurrence where the natural channels are on flat grades and have wide, flat flood plains. The control is critical depth at the outlet.

In culvert design, it is generally considered that the headwater pool maintains a constant level during the design storm. If this level does not submerge the culvert inlet, the culvert flows part full.

If critical flow occurs at the outlet the culvert is said to have "Outlet Control." A culvert flowing part full with outlet control will require a depth of flow in the barrel of the culvert greater than critical depth while passing through critical depth at the outlet.

The capacity of a culvert flowing part full with outlet control and tailwater depth below critical depth shall be governed by the following equation when the approach velocity is considered zero.

$$HW = d_c + h_e + h_f - S_oL$$

HW = Headwater depth above the invert of the upstream end of the culvert in feet. Headwater must be equal to or less than 1.2D or entrance is submerged and Type 4 operation will result.

d_c = Critical depth of flow in feet, refer to nomograph

D = Diameter of pipe or height of box.

q = Discharge in cfs per foot.

V_c = Critical velocity in feet per second occurring at critical depth.

h_e = Entrance head loss in feet.

$$h_e = K_e \frac{v_c^2}{2g}$$

K_e = Entrance loss coefficient (See Table C-6).

h_f = Friction head loss in feet = S_fL.

S_f = Friction slope or slope that will produce uniform flow. For Type I operation the friction slope is based upon 1.1 d_c (See Figures C-16 and C-22)

S_o = Slope of culvert in feet per foot.

L = Length of culvert in feet.

Type II

Culvert Flowing Part Full

With Outlet Control And Tailwater Depth

Above Critical Depth

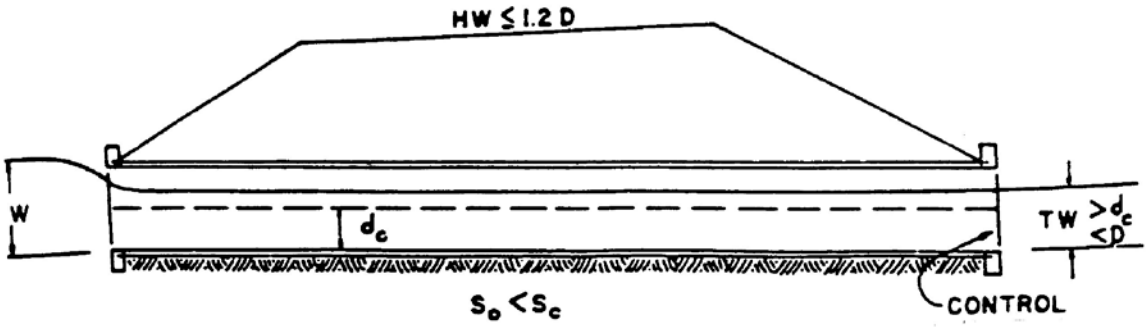

Figure 8-2

Conditions

The entrance is unsubmerged (HW < 1.2 D), the slope at design discharge is subcritical ($S_o < S_c$), and the tailwater is above critical depth (TW > dc).

The above condition is a common occurrence where the channel is deep, narrow and well defined.

If the headwater pool elevation does not submerge the culvert inlet, the slope at design discharge is subcritical, and the tailwater depth is above critical depth the control is said to occur at the outlet; and the capacity of the culvert shall be governed by the following equation when the approach velocity is considered zero.

$$HW = TW + \frac{V_{Tw}^2}{2g} + h_e + h_f - S_oL$$

HW = Headwater depth above the invert of the upstream end of the culvert in feet. Headwater depth must be equal to or less than 1.2D or entrance is submerged and Type IV operation will result.

TW = Tailwater depth above the invert of the downstream end of the culvert in feet.

V_{TW} = Culvert discharge velocity in feet per second at tailwater depth.

he = Entrance head loss in feet.

$$h_e = K_e \frac{V_{Tc}^2}{2g}$$

K_e = Entrance loss coefficient (See TAble C-6).

h_f = Friction head loss in feet = S_fL

S_f = Friction slope or slope that will produce uniform flow. For Type II operation the friction slope is based upon TW depth.

S_o = Slope culvert in feet per foot.

L = Length of culvert in feet.

Type III

Culvert Flowing Part Full With Inlet Control

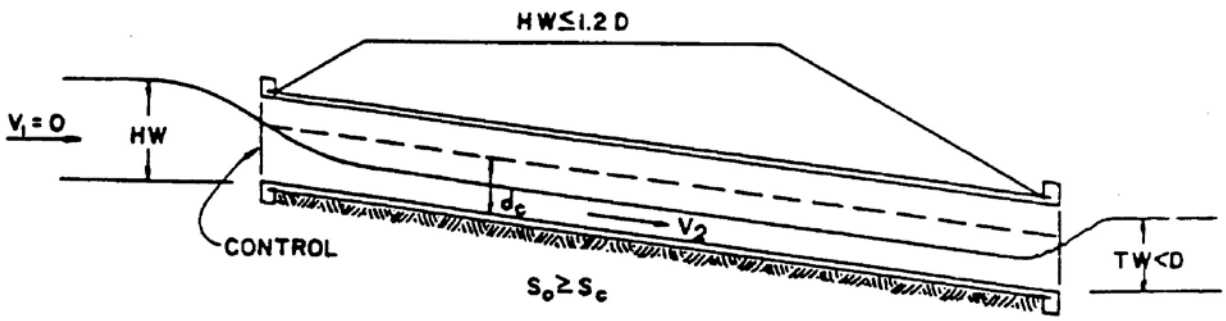

Figure 8-3

Conditions

The entrance is unsubmerged (HW < 1.2D) and the slope at design discharge is equal to or greater than critical (Supercritical) (So > Sc).

The condition is a common occurrence for culverts in rolling or mountainous country where the flow does not submerge the entrance. The control is critical depth at the entrance.

If critical flow occurs near the inlet, the culvert is said to have "Inlet Control". The maximum discharge through a culvert flowing part full occurs when flow is at critical depth for a given energy head. To assure that flow passes through critical depth near the inlet, the culvert must be laid on a slope equal to or greater than critical slope for the design discharge. Placing culverts which are to flow part full on slopes greater than critical slope will increase the outlet velocities but will not increase the discharge. The discharge is limited by the section near the inlet at which critical flow occurs.

The capacity of a culvert flowing part full with control at the inlet shall be governed by the following equation when the approach velocity is considered zero.

$$HW = d_c + \frac{K_e}{2g}\left(V_2\right)^2$$

HW = Headwater depth above the invert of the upstream end of the culvert in feet. Headwater depth must be equal to or less than 1.2D or entrance is submerged and Type IV operation will result.

d_c = Critical depth of flow in feet,

q = Discharge in cfs per foot.

V_2 = Velocity of flow in the culvert in feet per second.

The velocity of flow varies from critical velocity at the entrance to uniform velocity at the outlet provided the culvert is sufficiently long. Therefore, the outlet velocity is the discharge divided by the area of flow in the culvert.

K_e = Entrance loss coefficient (See Table C-6).

Type IV-A

Culvert Flowing Full With Submerged Outlet

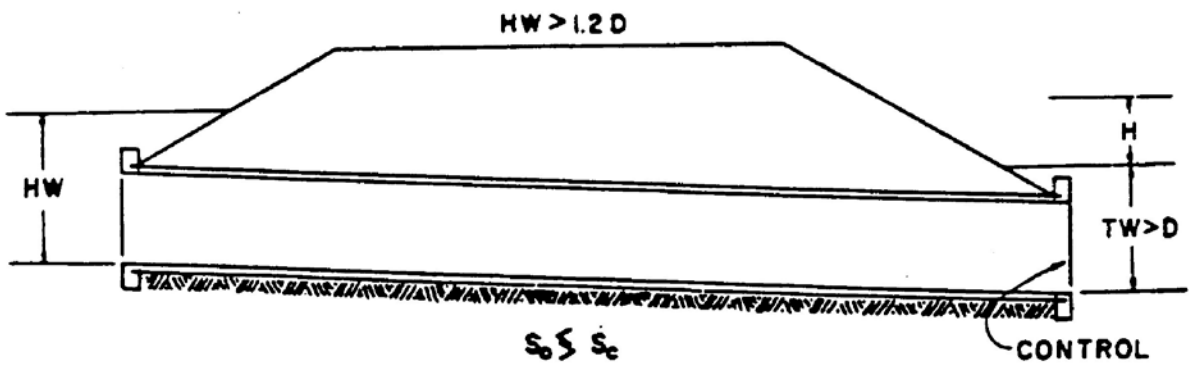

Figure 8-4

Conditions

(Submerged Outlet)

The entrance is submerged (HW > 1.2D). The tailwater completely submerges the outlet.

Most culverts flow with free outlet, but depending on topography, a tailwater pool of a depth sufficient to submerge the outlet may form at some installation. Generally, these will be considered at the outlet. For an outlet to be submerged, the depth at the outlet must be equal to or greater than the diameter of pipe of height of box. The capacity of a culvert flowing full with a submerged outlet shall be governed by the following equation when the approach velocity is considered zero. Outlet Velocity is based on full flow at the outlet.

$HW = H + TW - S_oL$

HW = Headwater depth above the invert of the upstream end of the culvert. Headwater depth must be greater than 1.2D for entrance to be submerged.

H = Head for culvert flowing full.

TW = Tailwater depth in feet.

S_o = Slope of culvert in feet per foot.

L = Length of culvert in feet.

Type IV-B

Culvert Flowing Full
With Partially Submerged Outlet

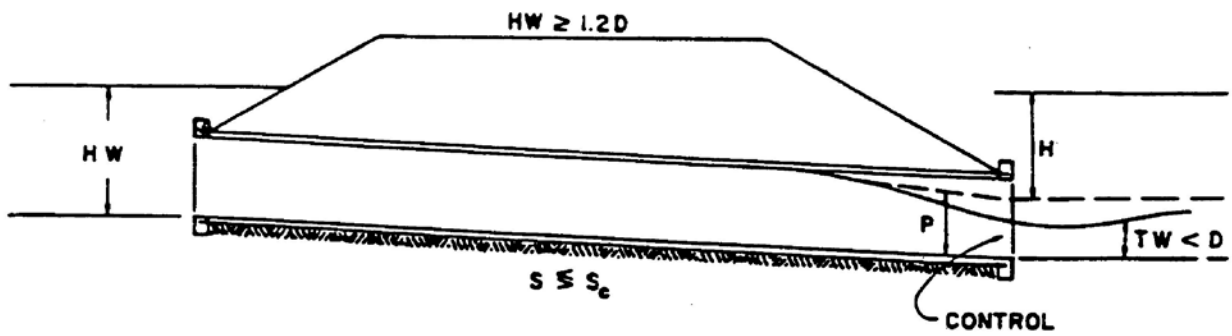

Figure 8-5

Conditions

(Partially Submerged Outlet)

The entrance is submerged (HW > 1.2D). The tailwater depth is less than D (TW < D).

The capacity of a culvert flowing full with a partially submerged outlet shall be governed by the following equation when the approach velocity is considered zero. Outlet velocity is based on critical depth if TW depth is less than critical depth. If TW depth is greater than critical depth, outlet velocity is based on TW depth.

$$HW = H + P - S_oL$$

HW = Headwater Depth above the invert of the upstream end of the culvert. Headwater depth must be greater than 1.2D for entrance to be submerged.

H = Head for culverts flowing full.

$$P = \text{Pressure line height} = \frac{d_c + D}{2}$$

d_c = Critical depth in feet.

D = Diameter or height of structure in feet.

S_o = Slope of culvert in feet per foot.

L = Length of culvert in feet.

EXHIBIT C
LIST OF FIGURES
(In Sequential Order in Exhibit C)

Figure No.	Title
C-1	Rainfall Intensity-Duration Frequency Curves, Rural
C-2	Discharge of Pipes - Manning's Formula, n = 0.015
C-3	Discharge of Pipes - Manning's Formula, n = 0.025
C-4	Depth of Gutter Flow vs. Discharge: 32'-0" Residential, 4" Parabolic Crown
C-5	Depth of Gutter Flow vs. Velocity: 32'-0" Residential, 4" Parabolic Crown
C-6	Depth of Gutter Flow vs. Discharge: All Streets with 2% Cross Slope
C-7	Depth of Gutter Flow vs. Velocity: All Streets with 2% Cross Slope
C-8	Rainfall Intensity - Duration - Frequency Curves-Urban
C-9	Curb Inlet - Type "M"
C-10	Theoretical Inlet Capacity: Curb Opening Inlet in Sump Condition at Low Point
C-11	Theoretical Inlet Capacity: 4'-0" Long Depressed Curb Opening Inlet
C-12	Minor Head Losses Due to Turbulence at Structures
C-13	Minor Head Losses Due to Turbulence at Structures
C-14	Uniform Flow for Trapezoid Channels
C-15	Critical Depth of Flow for Circular Conduits
C-16	Uniform Flow for Pipe Culverts
C-17	Headwater Depth for Concrete Pipe Culverts with Inlet Control
C-18	Head for Concrete Culverts Flowing Full
C-19	Headwater Depth for CM Pipe Culverts with Inlet Control

C-20 Head for CM Pipe Culverts Flowing Full

C-21 Critical Flow for Box Culverts

C-22 Uniform Flow for Box Culverts

C-23 Headwater Depth for Box Culverts with Inlet Control

C-24 Head for Concrete Box Culverts Flowing Full

LIST OF TABLES

Table No.

C-1 Runoff Coefficients Based on Land Use

C-2 Runoff Coefficients Based on Surface Characteristics

C-3 Roughness Coefficients

C-4 Return Period

C-5 Losses in Hydraulic Systems

C-6 Culvert Losses

C-7 Computation of Composition Roughness Coefficients for Excavated and Natural Channels

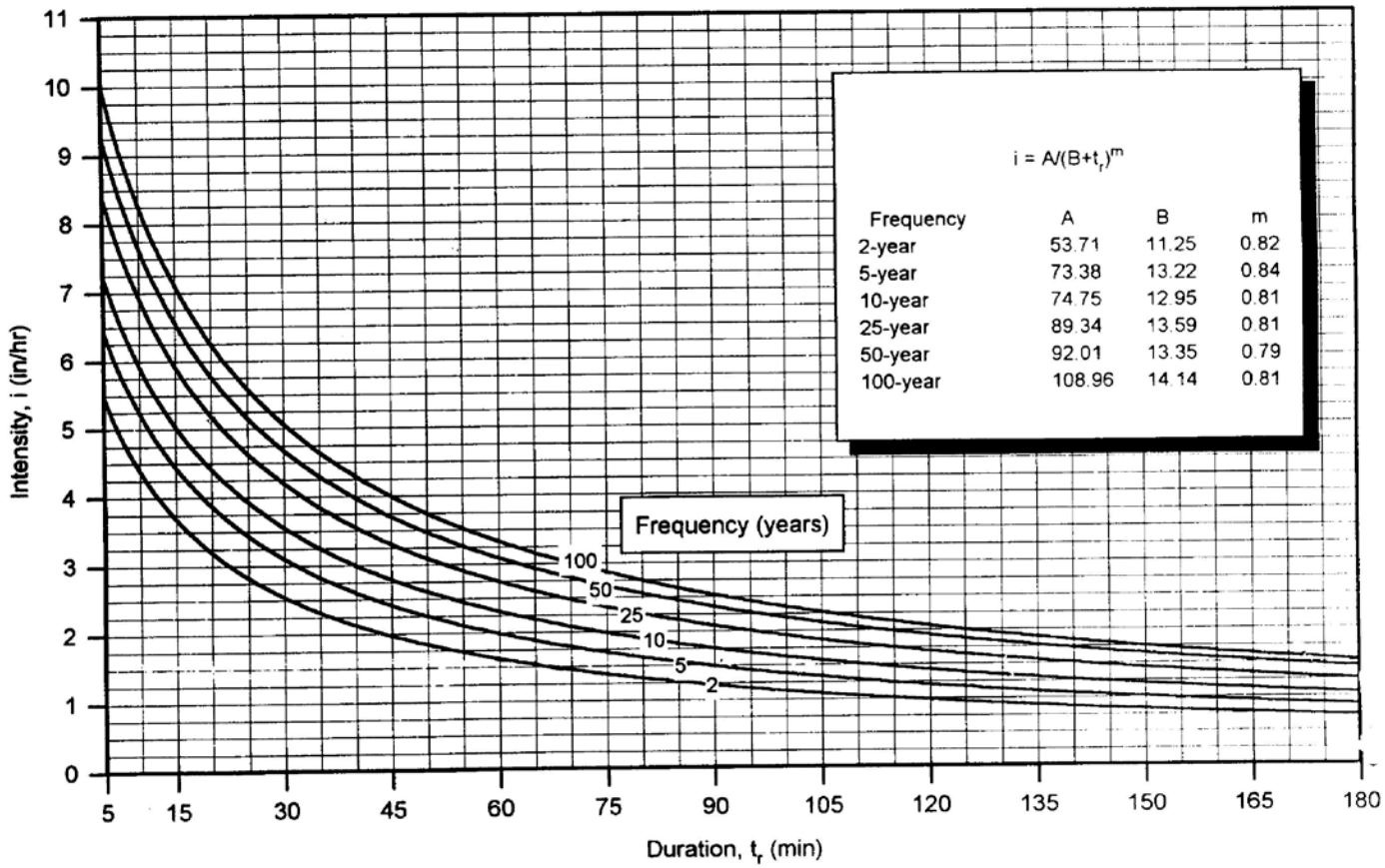

$i = A/(B+t_r)^m$

Frequency	A	B	m
2-year	53.71	11.25	0.82
5-year	73.38	13.22	0.84
10-year	74.75	12.95	0.81
25-year	89.34	13.59	0.81
50-year	92.01	13.35	0.79
100-year	108.96	14.14	0.81

Rainfall Intensity-Duration-Frequency Curves

FIGURE C-1

LOSSES IN HYDRAULIC SYSTEMS (Cont'd)

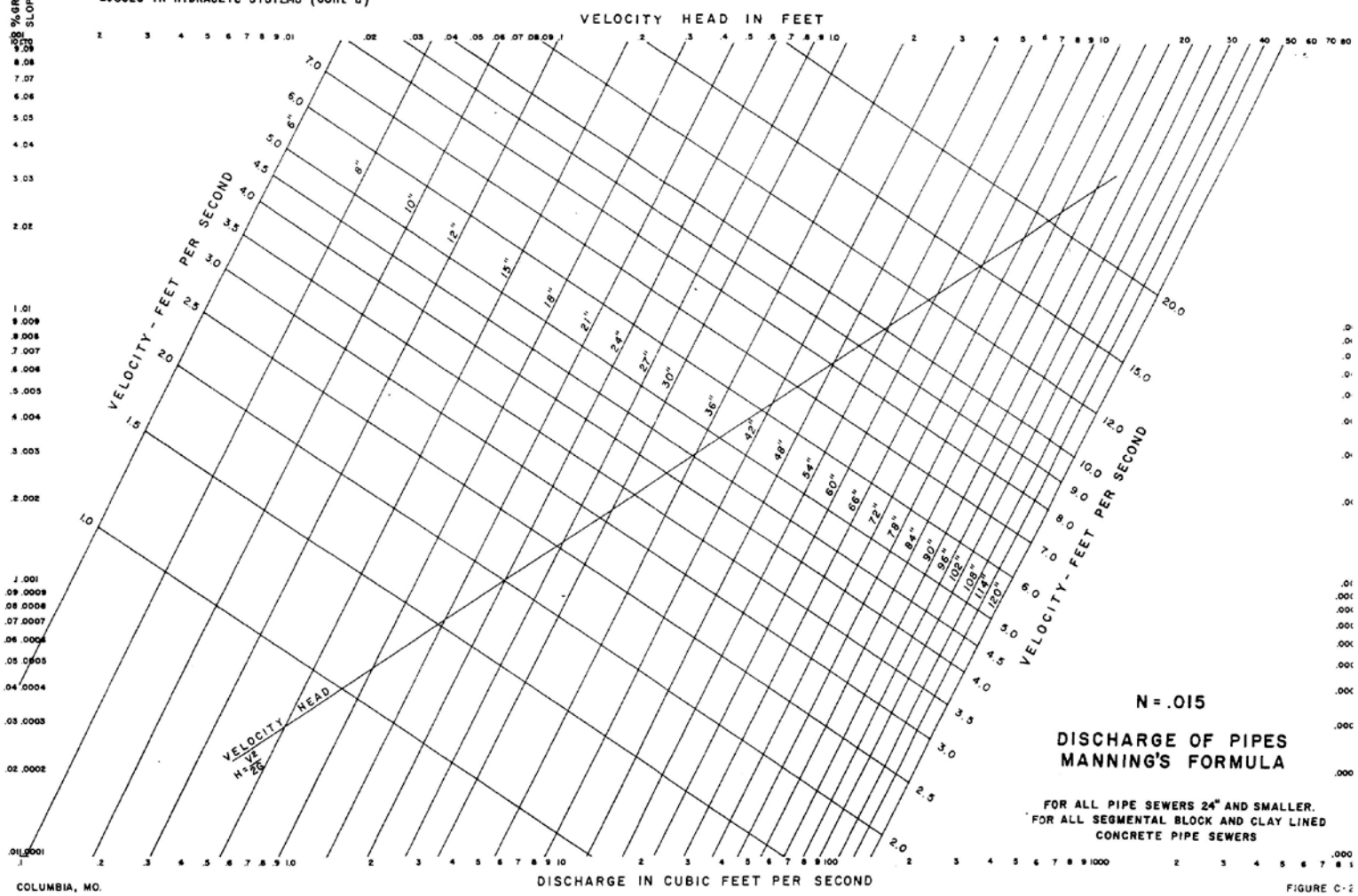

COLUMBIA, MO.

FIGURE C-2

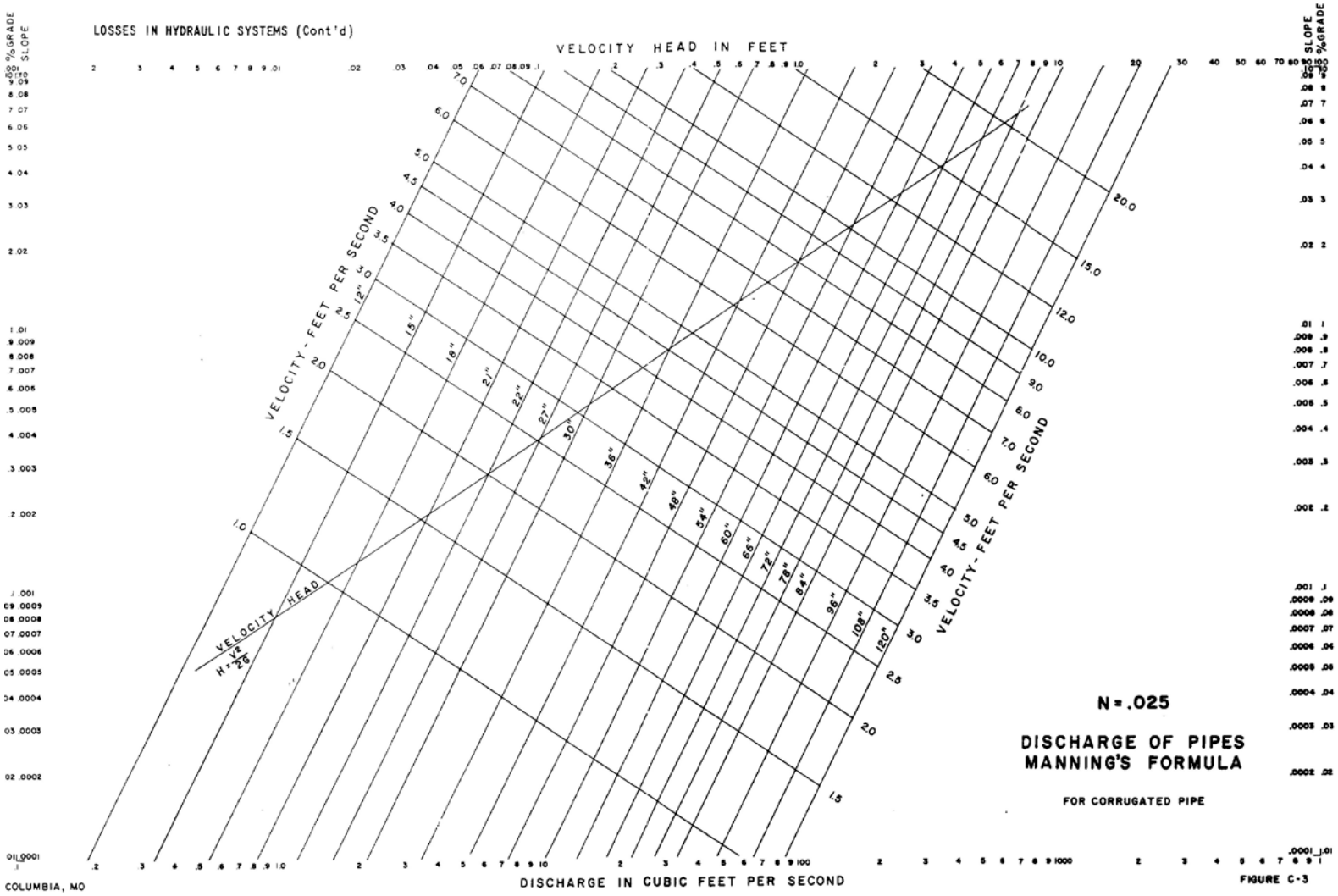

COLUMBIA, MO

FIGURE C-3

DEPTH OF GUTTER FLOW vs. DISCHARGE

4" PARABOLIC CROWN

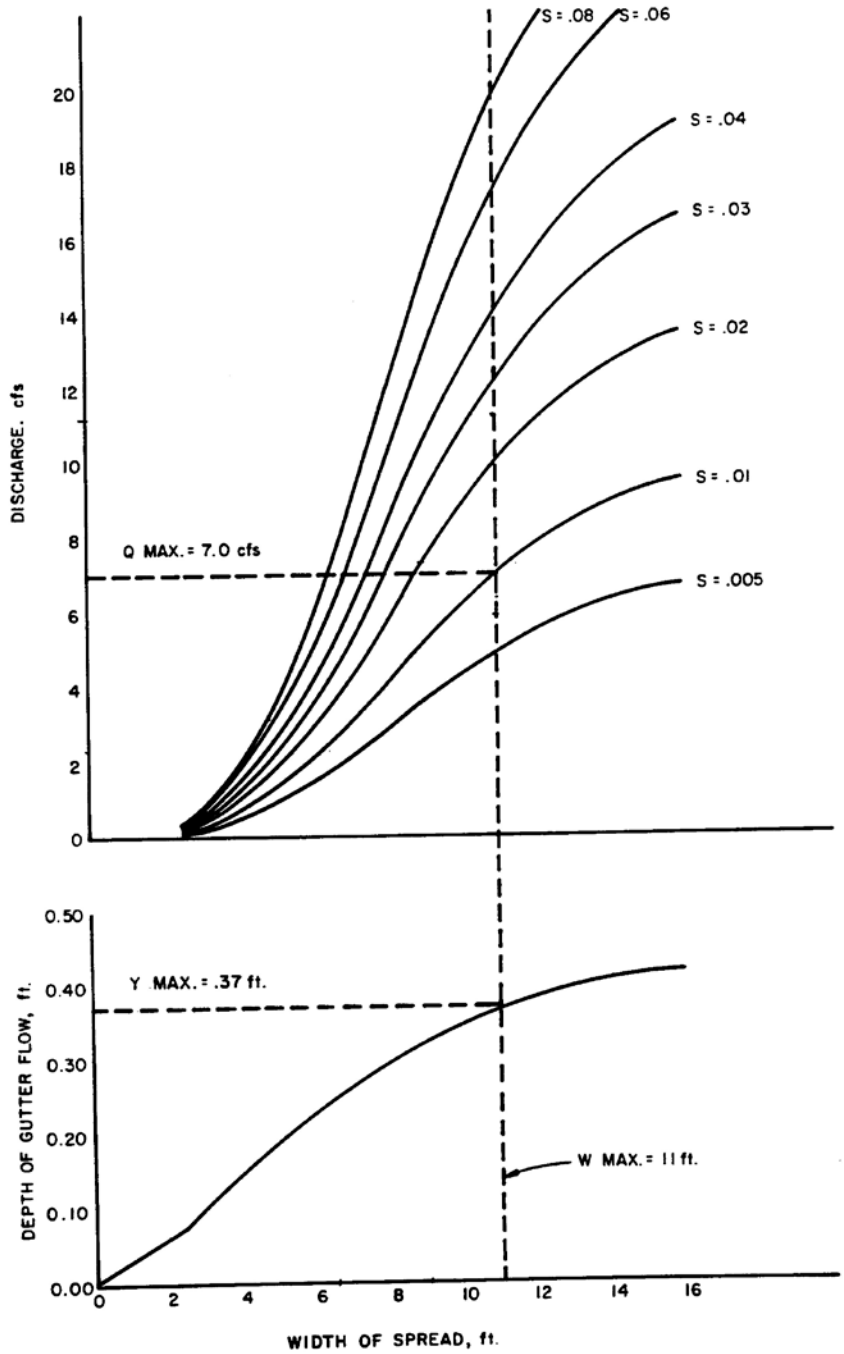

FIGURE C-4

DEPTH OF GUTTER FLOW vs. VELOCITY

4" PARABOLIC CROWN

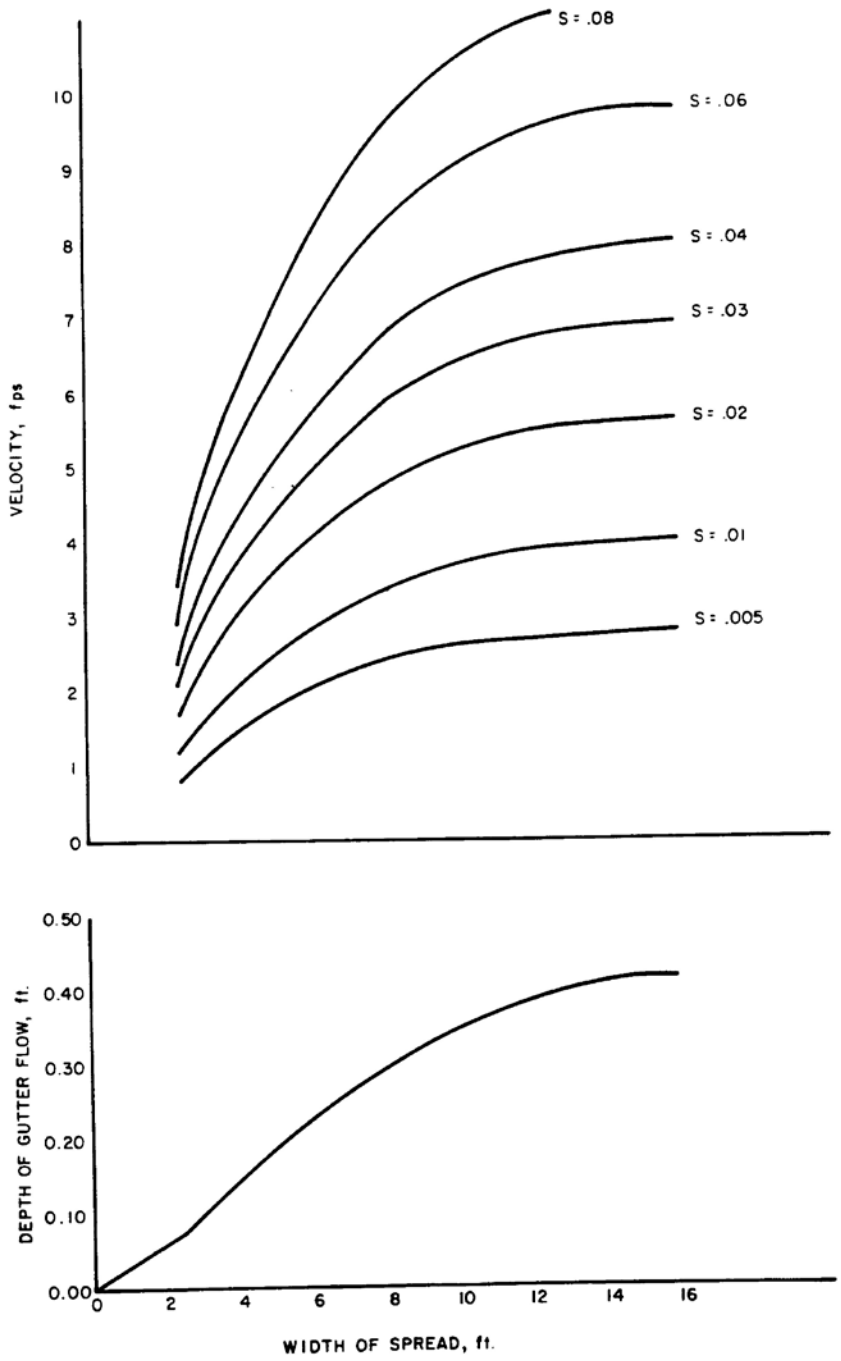

FIGURE C-5

DEPTH OF GUTTER FLOW vs. DISCHARGE
ALL STREETS WITH 2 % CROSS SLOPE

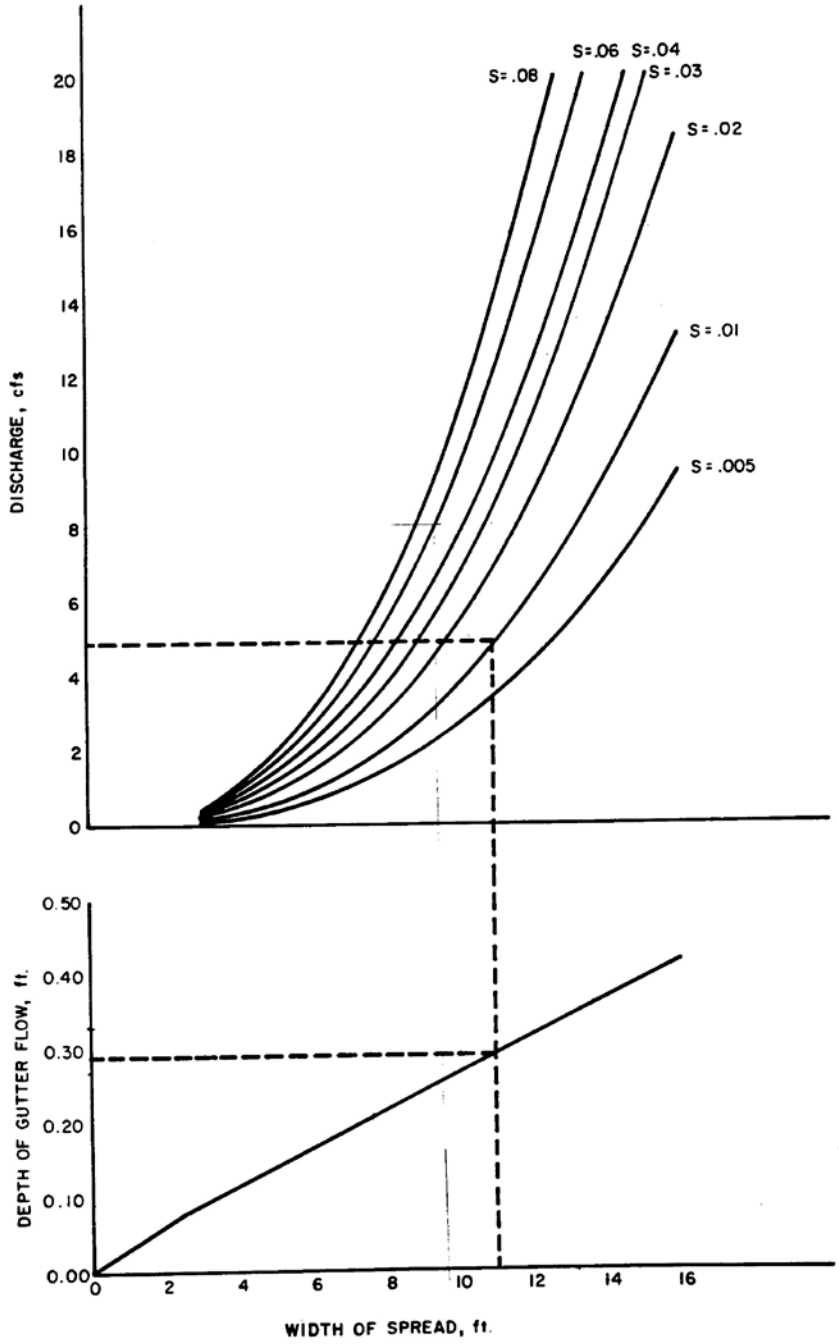

FIGURE C-6

DEPTH OF GUTTER FLOW vs. VELOCITY

ALL STREETS WITH 2% CROSS SLOPE

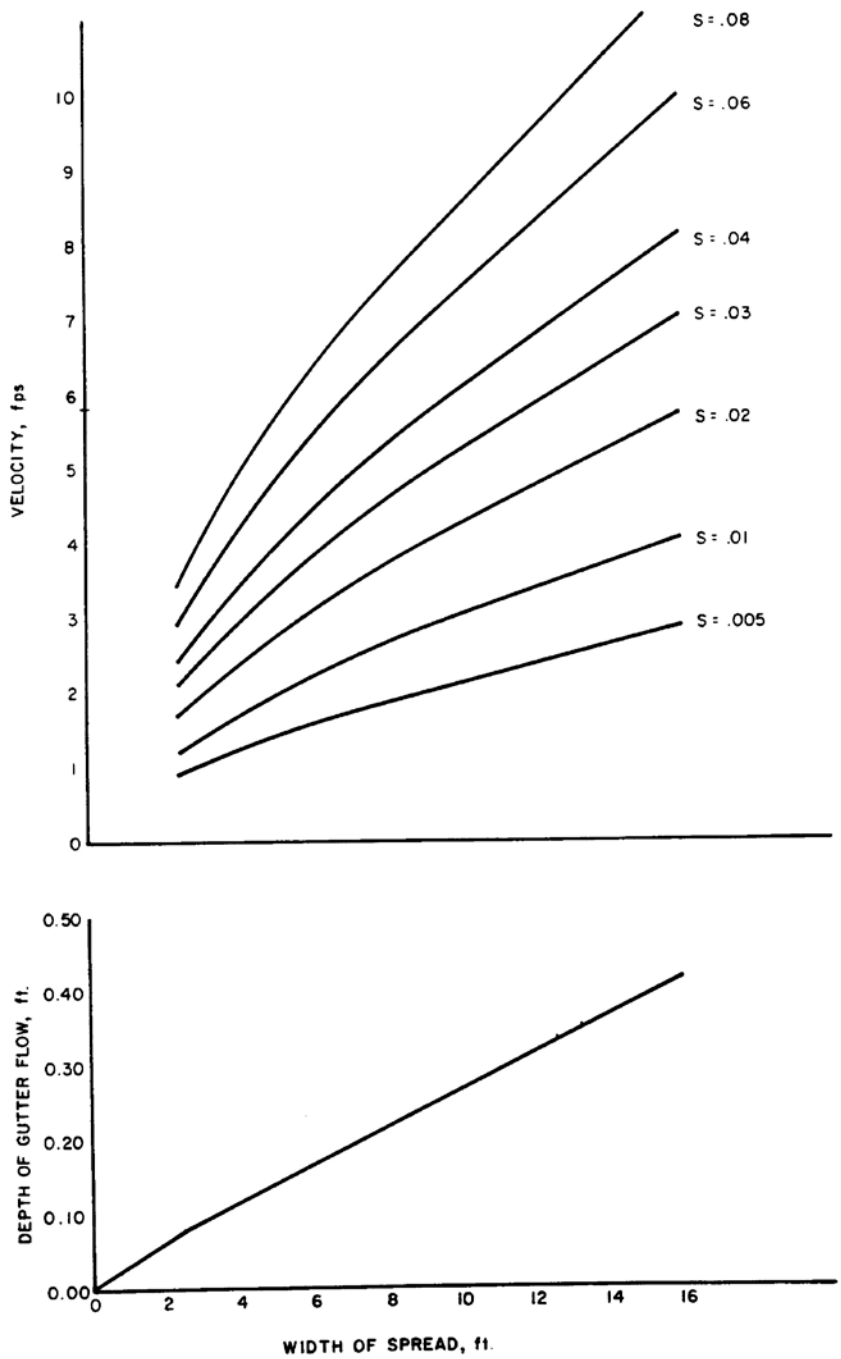

FIGURE C-7

RAINFALL INTENSITY - DURATION
FREQUENCY CURVES

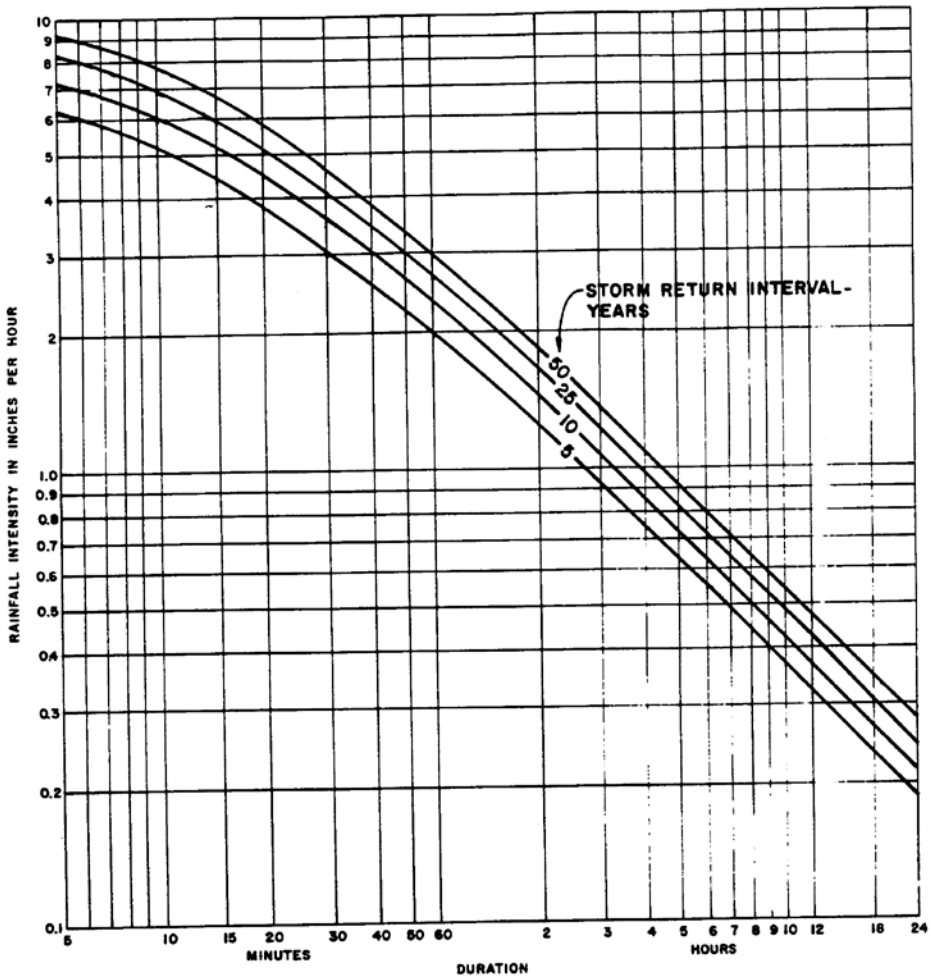

FIGURE C - 8

This page has been intentionally left blank.

THEORETICAL INLET CAPACITY

CURB OPENING INLET IN SUMP CONDITION AT LOW POINT

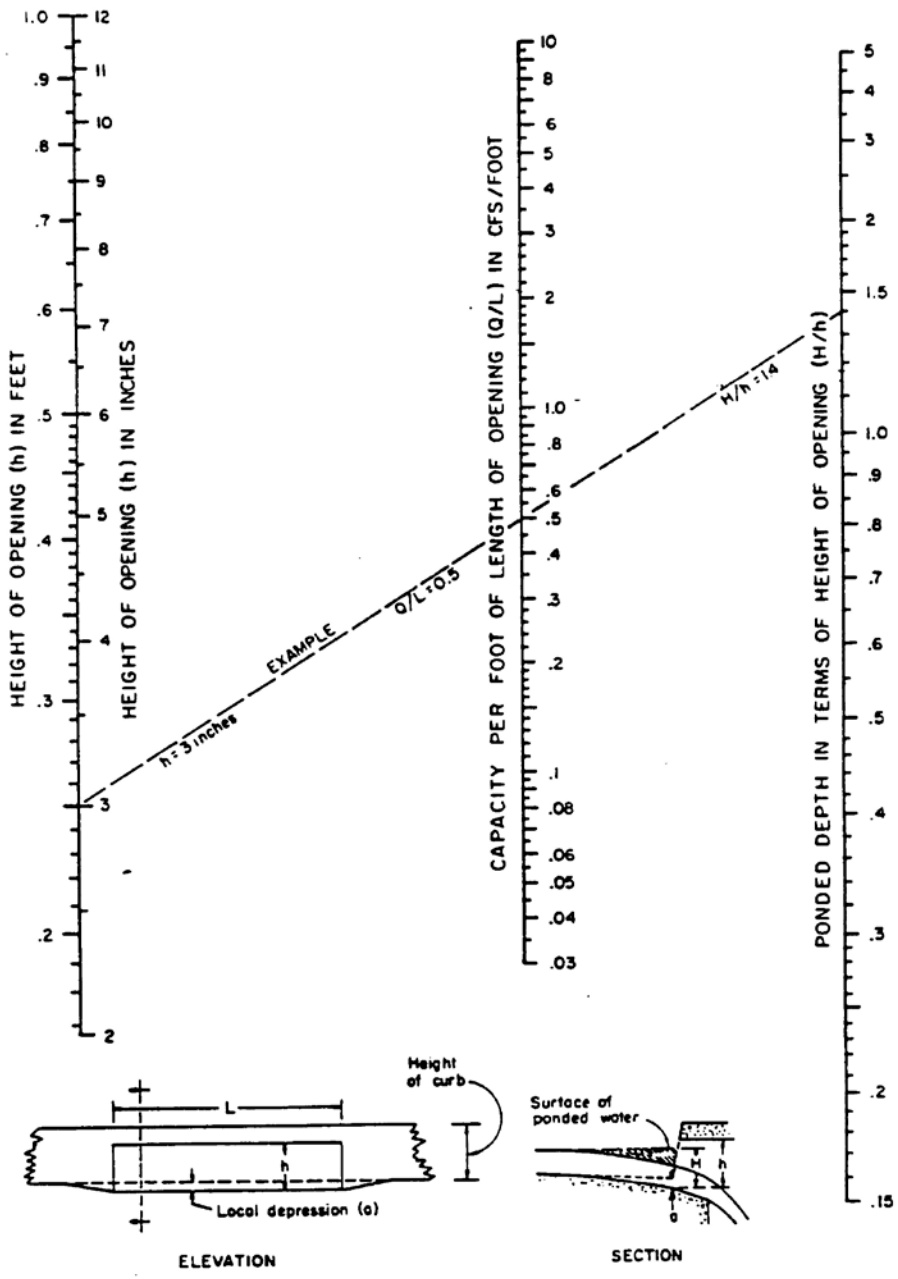

THEORETICAL INLET CAPACITY
4'-0" LONG DEPRESSED CURB OPENING INLET

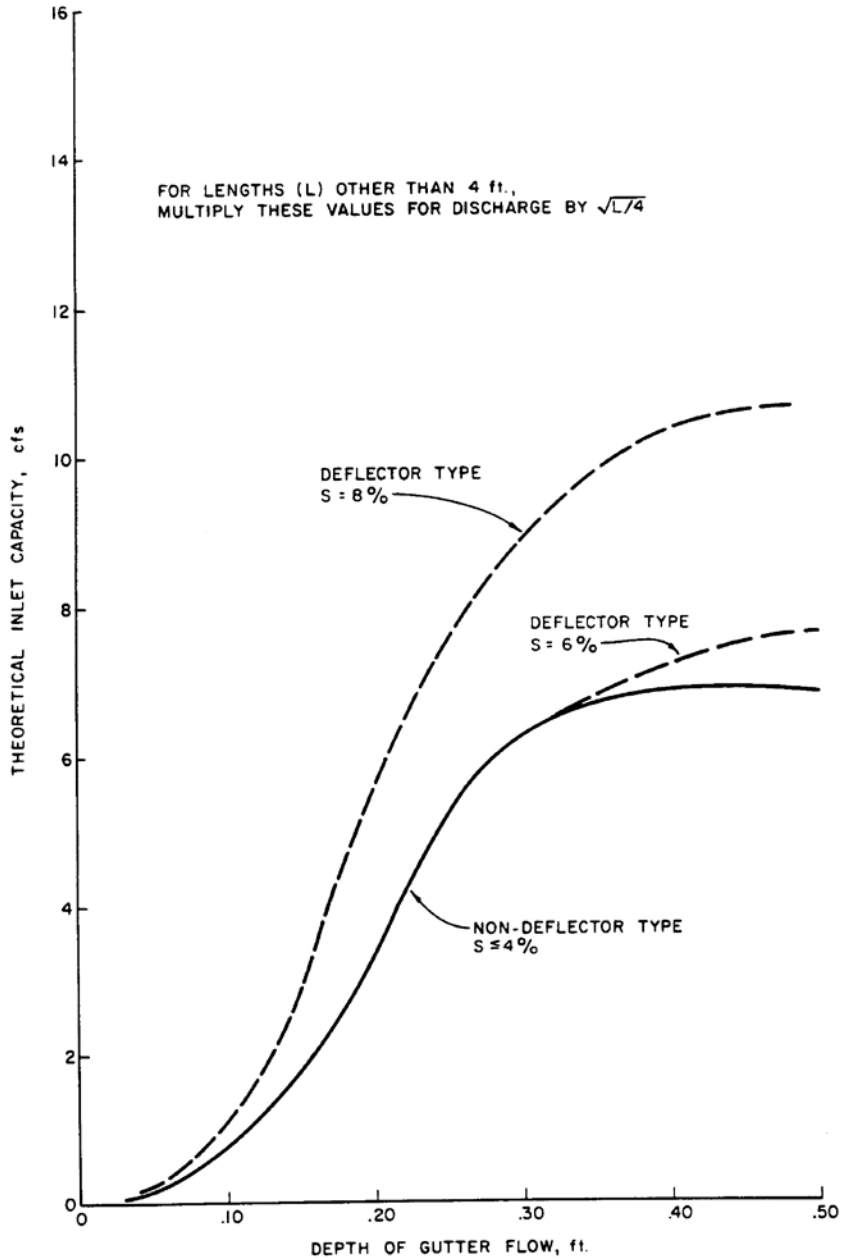

This page has been intentionally left blank.

This page has been intentionally left blank.

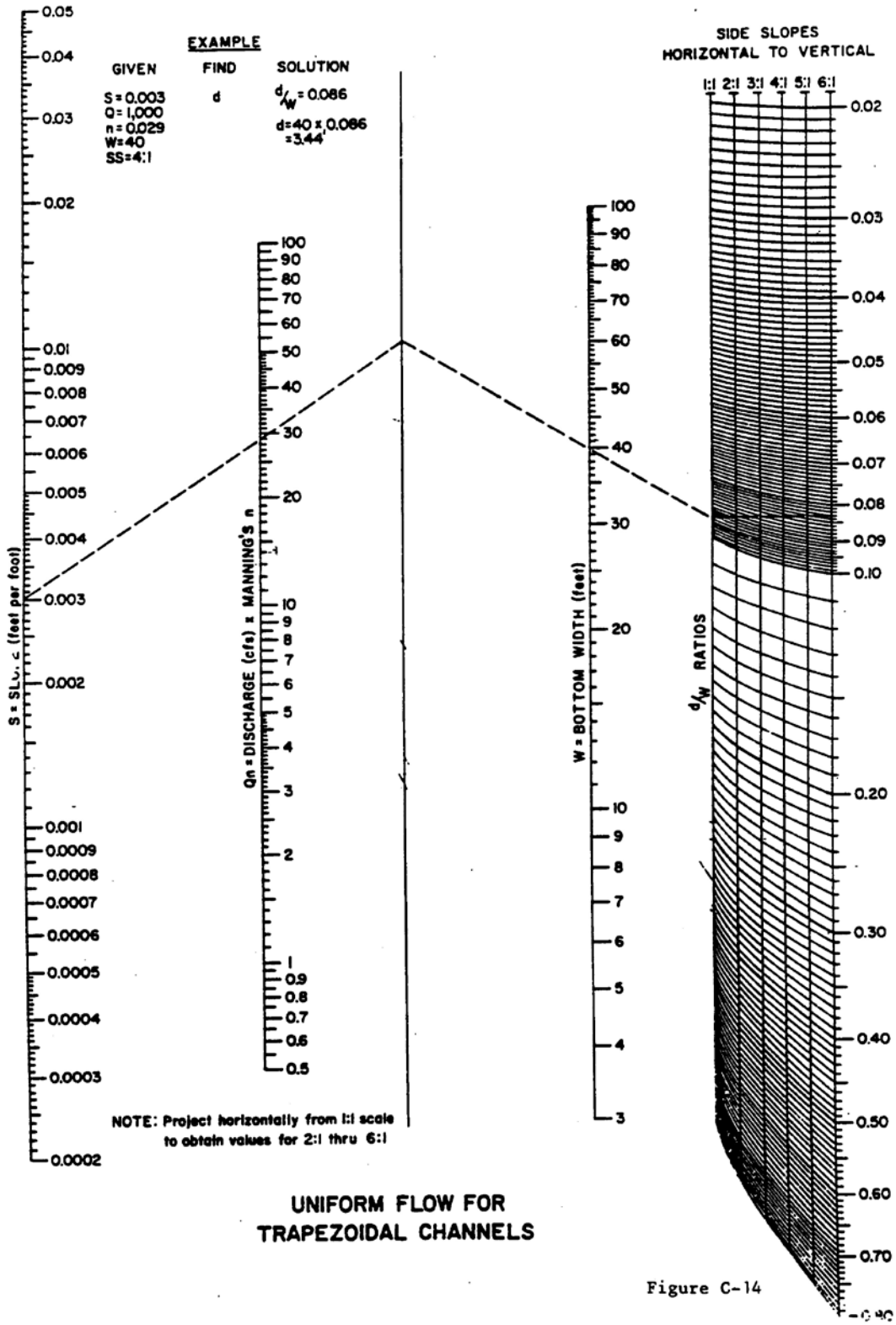

UNIFORM FLOW FOR TRAPEZOIDAL CHANNELS

Figure C-14

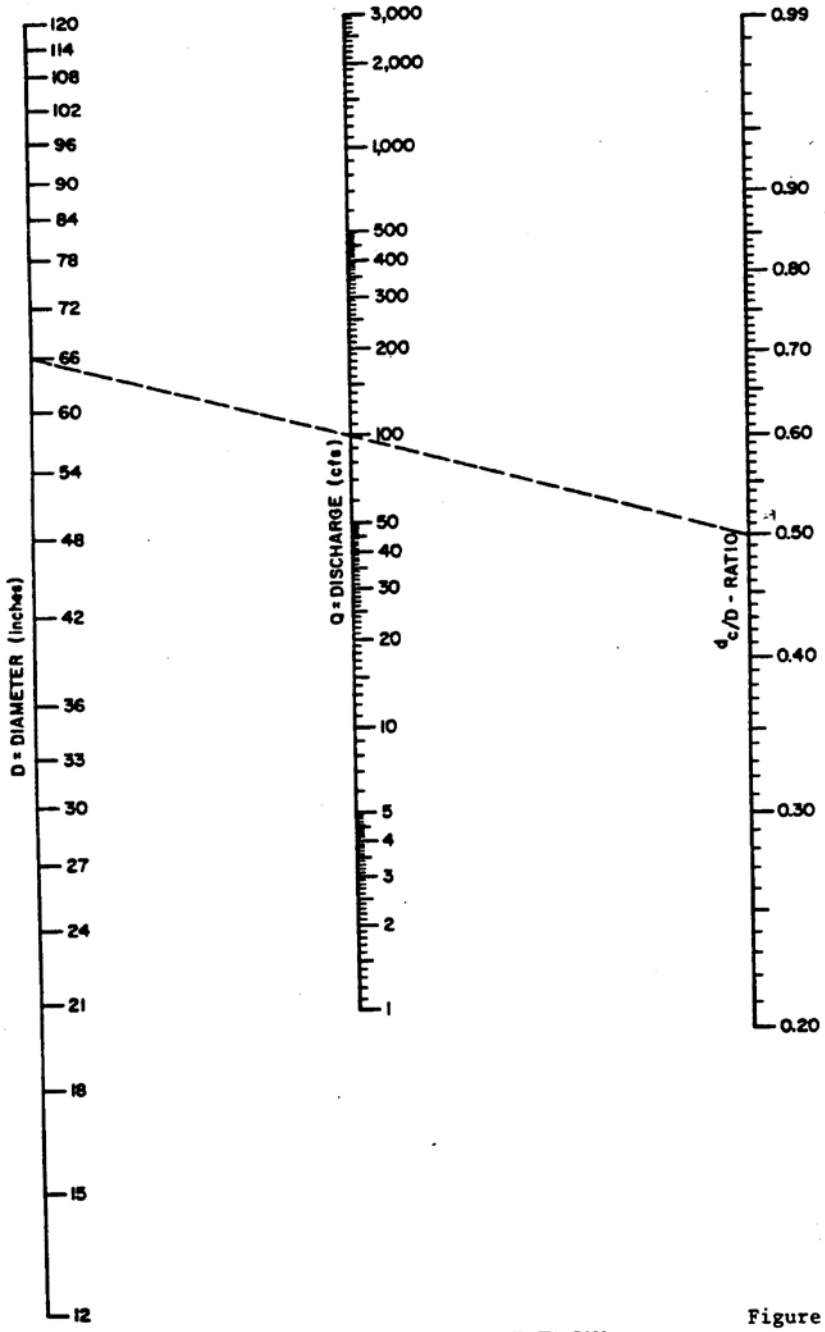

Figure C-15

CRITICAL DEPTH OF FLOW
FOR CIRCULAR CONDUITS

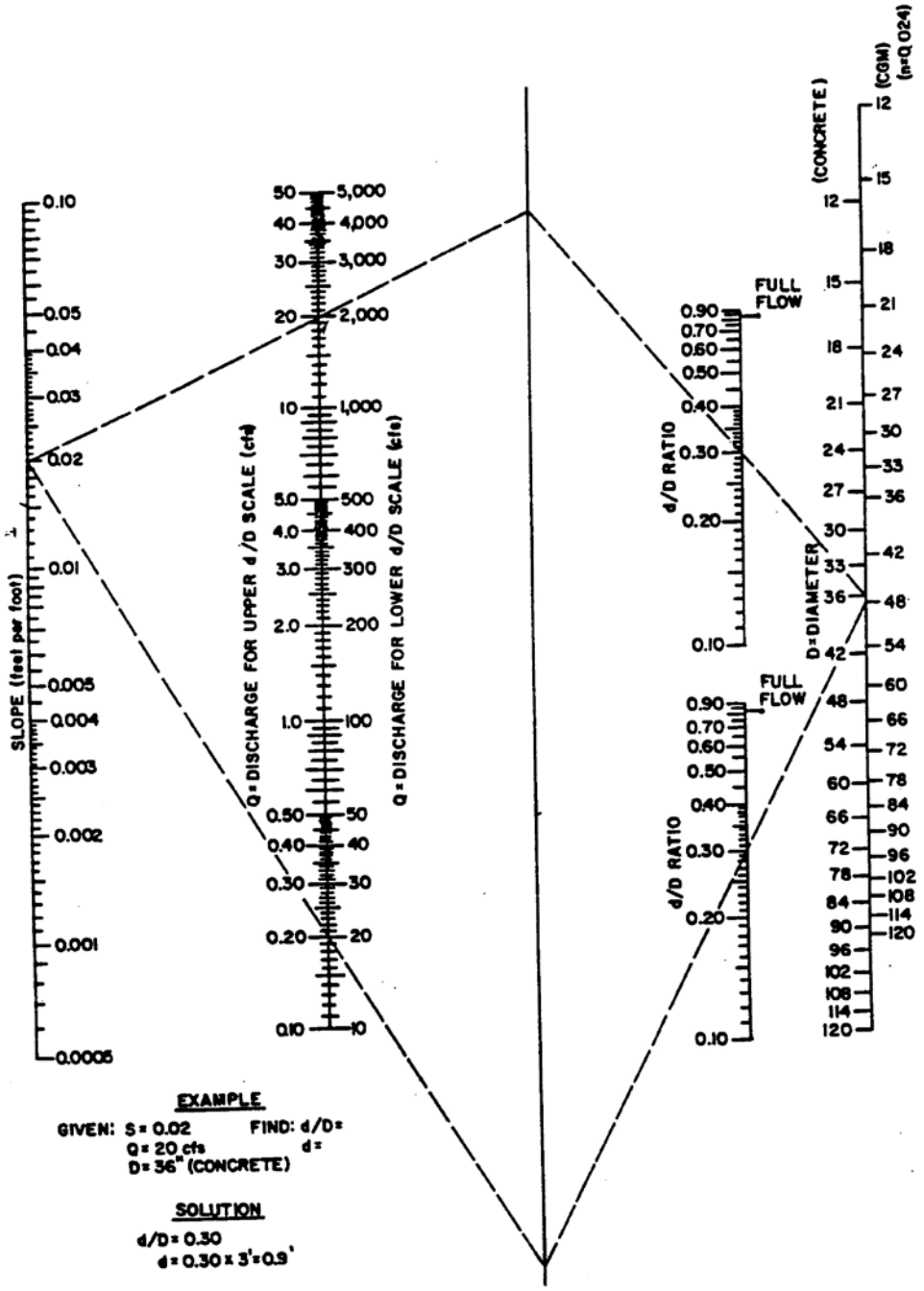

Figure C-16

UNIFORM FLOW FOR PIPE CULVERTS

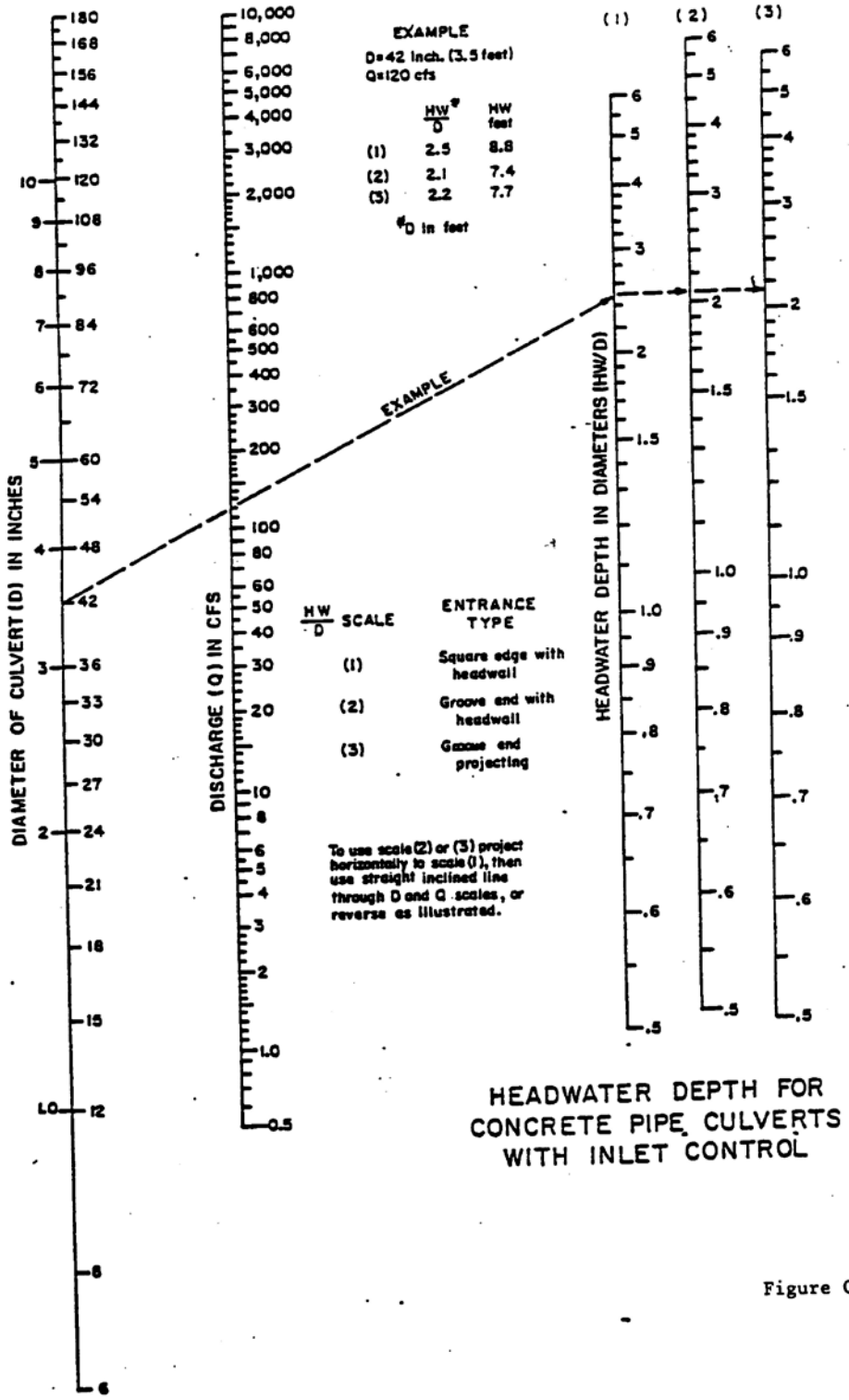

HEADWATER DEPTH FOR CONCRETE PIPE CULVERTS WITH INLET CONTROL

Figure C-17

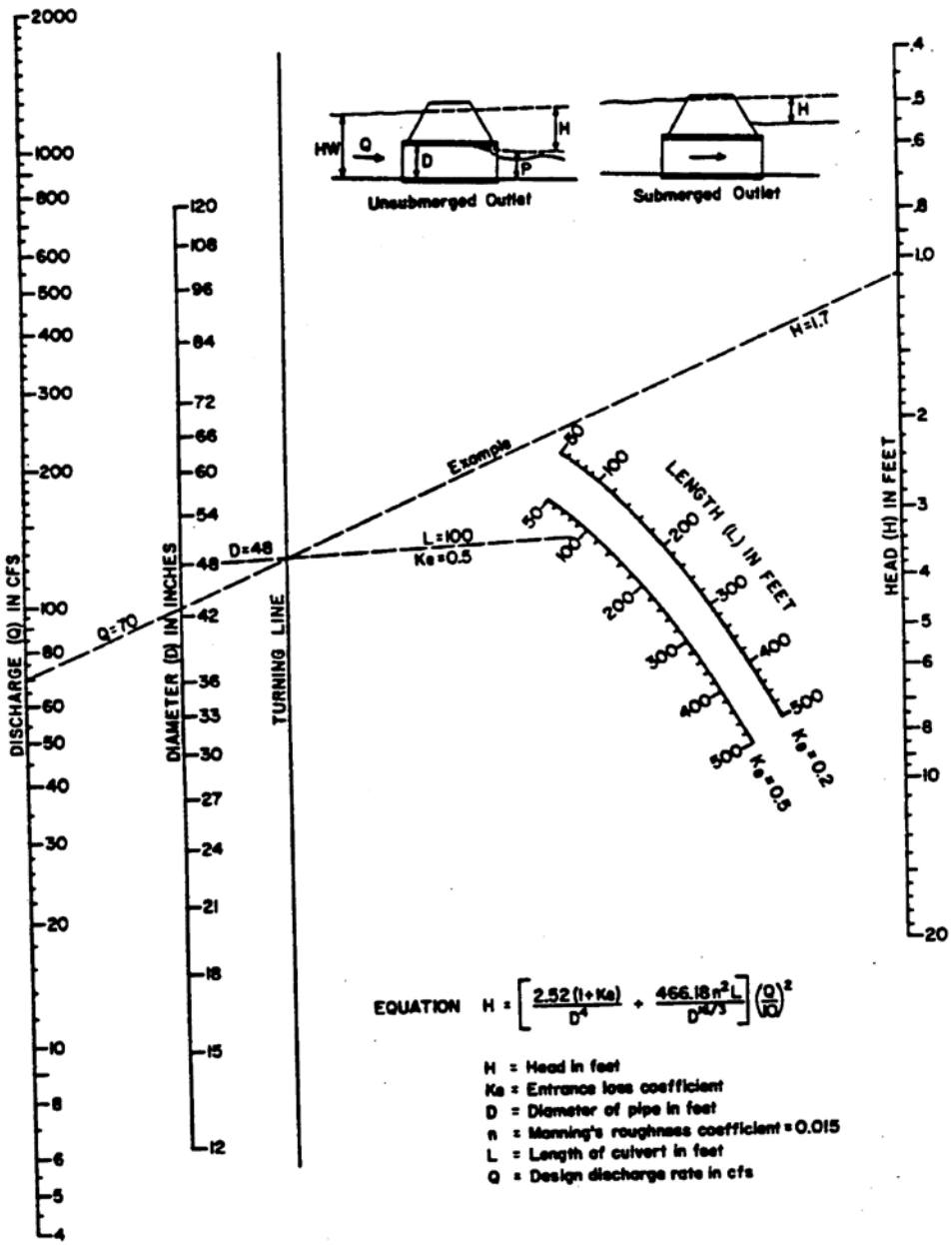

HEAD FOR CONCRETE PIPE CULVERTS FLOWING FULL

Figure C-18

HEADWATER DEPTH FOR C.M. PIPE CULVERTS WITH INLET CONTROL

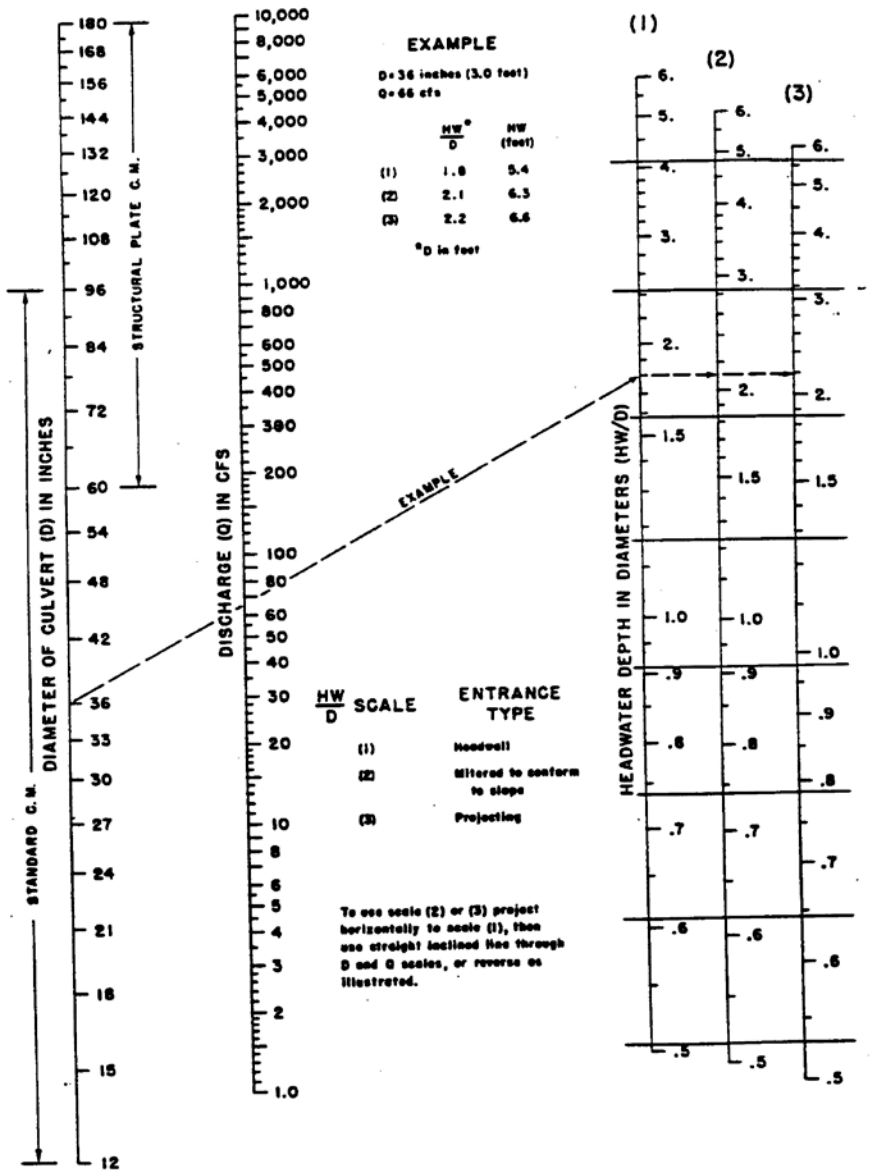

Figure C-19

COLUMBIA, MO.

HEAD FOR STANDARD C.M. PIPE CULVERTS FLOWING FULL

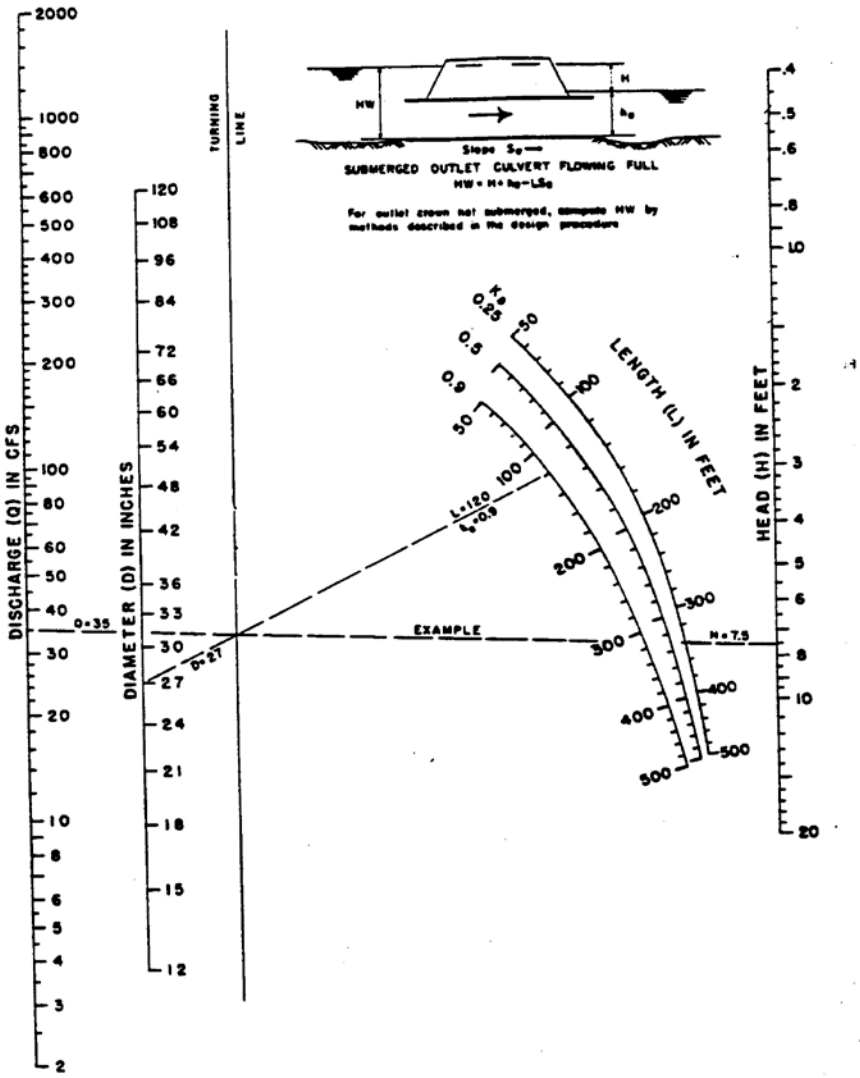

Figure C-20

COLUMBIA, MO.

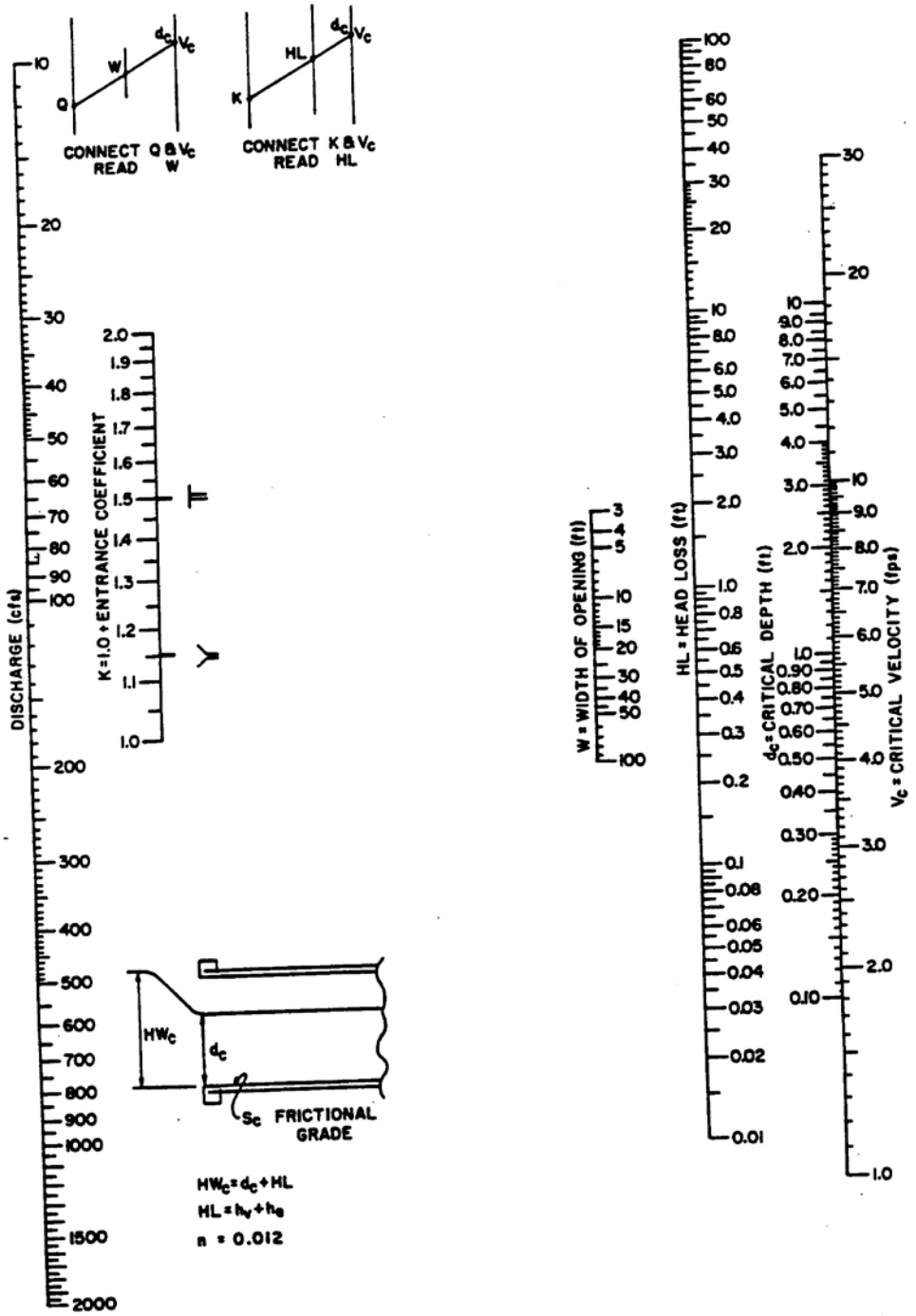

CRITICAL FLOW FOR BOX CULVERTS

Figure C-21

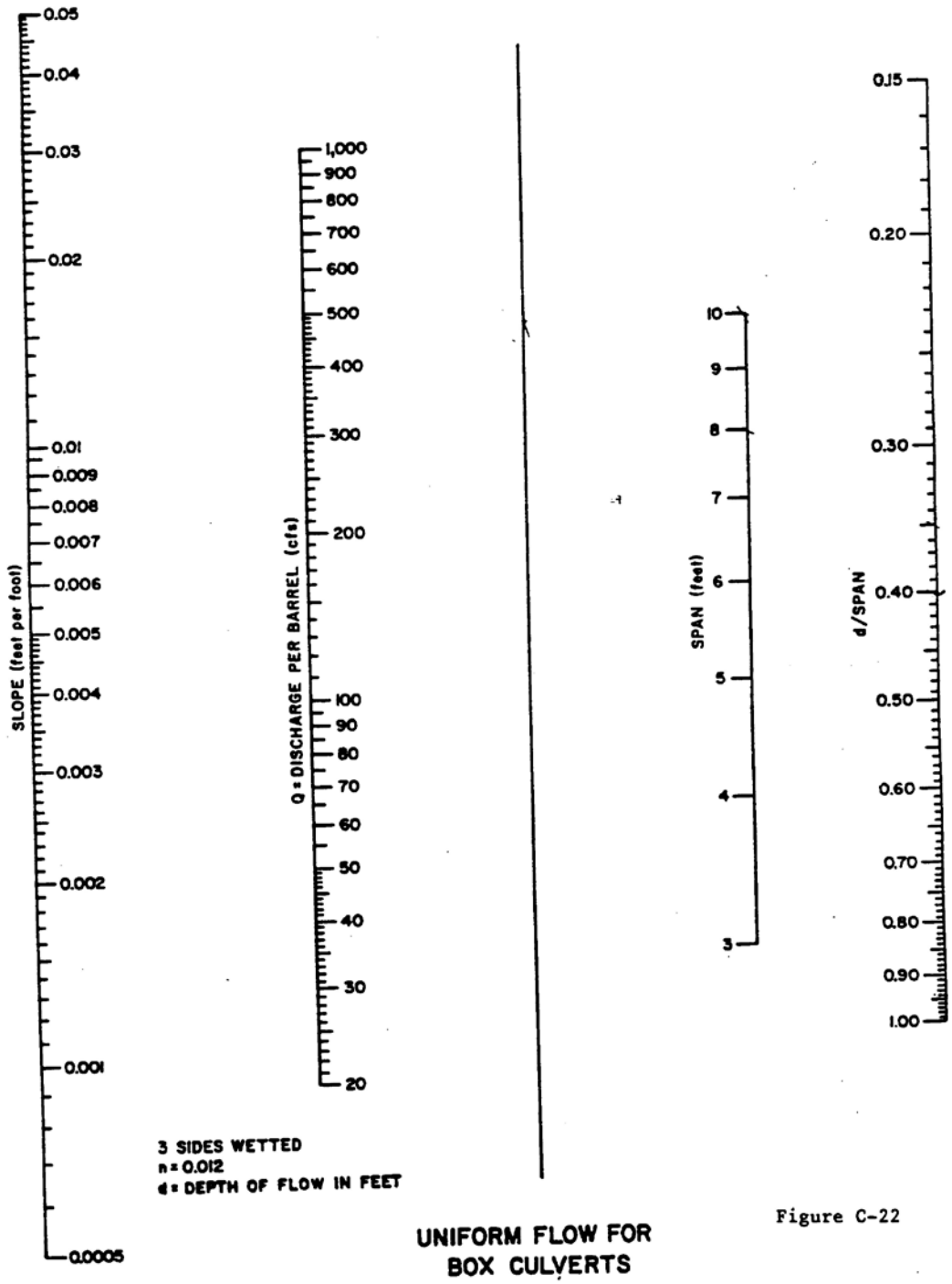

3 SIDES WETTED
n = 0.012
d = DEPTH OF FLOW IN FEET

UNIFORM FLOW FOR
BOX CULVERTS

Figure C-22

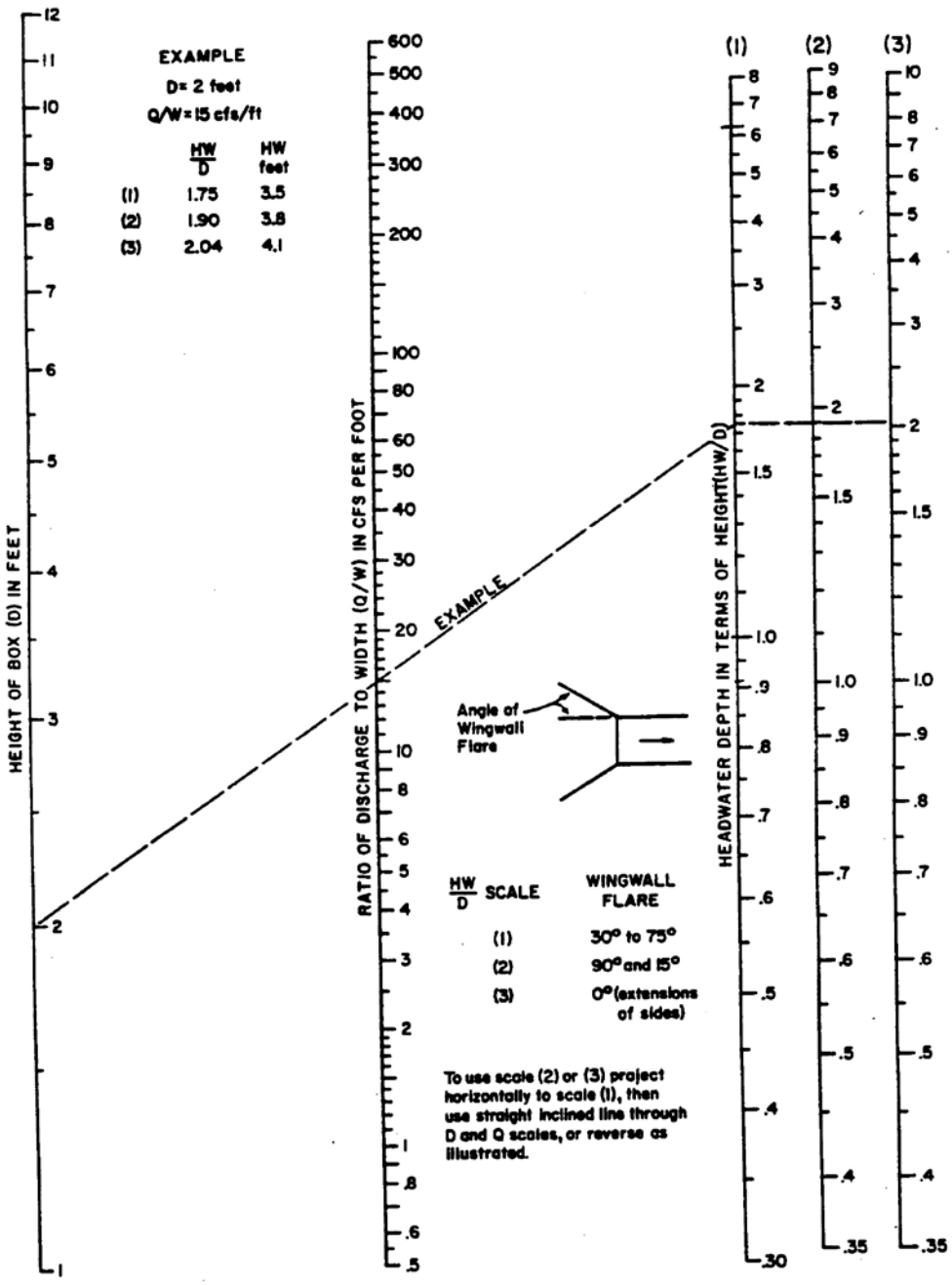

HEADWATER DEPTH FOR BOX CULVERTS WITH INLET CONTROL

Figure C-23

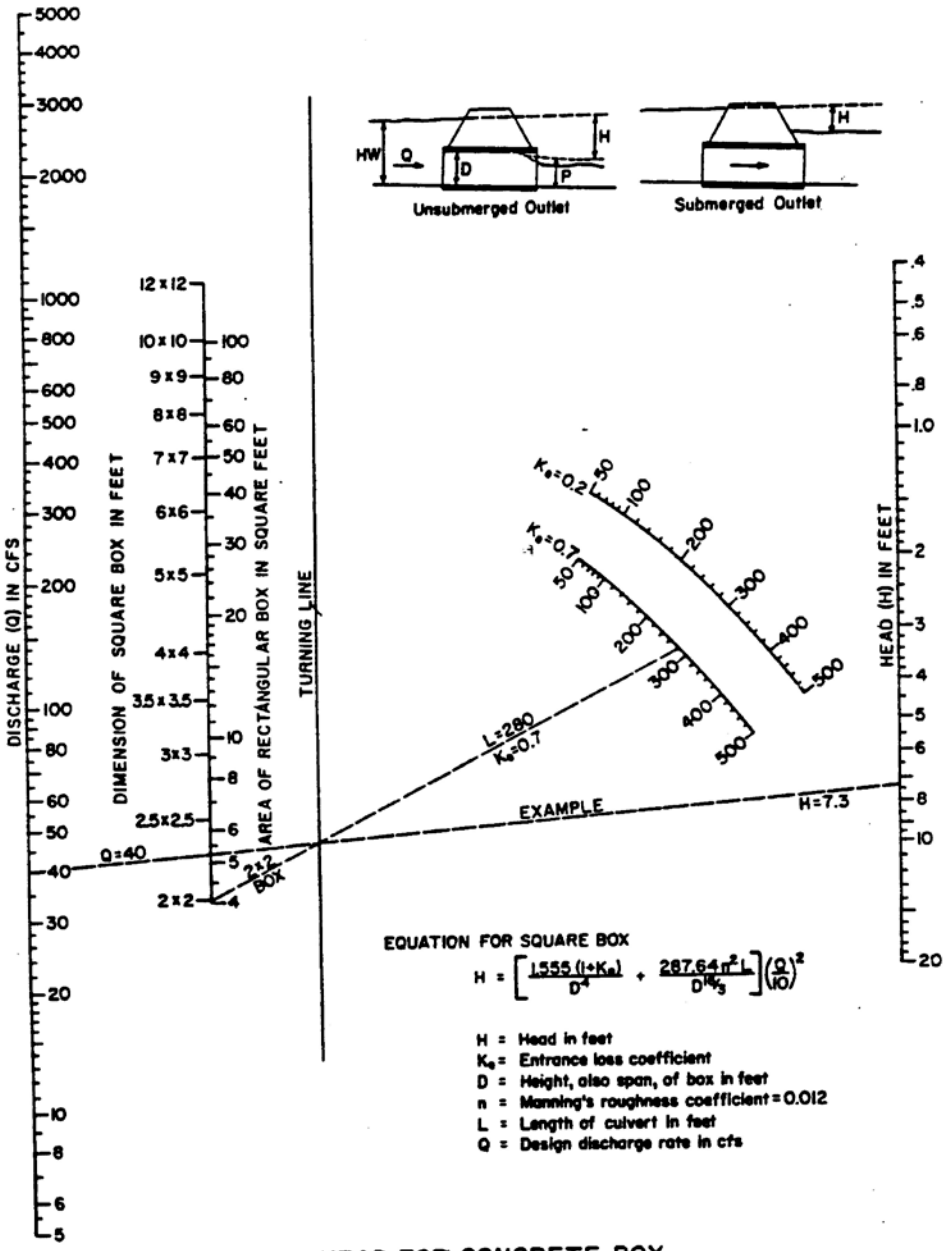

HEAD FOR CONCRETE BOX CULVERTS FLOWING FULL

Figure C-24

TABLE C-1
RATIONAL METHOD RUNOFF COEFFICIENTS BY LAND USE TYPE
For Use in Q=CiA

Runoff Coefficient (C) Return Period

Land Use District and Zoning	% I.C.**	Land Slope	6* Mo.	1* Yr.	2 Yr.	5 Yr.	10 Yr.	25 Yr.	50 Yr.	100 Yr.
Low Density		0-2%	.28	.30	.33	.36	.38	.42	.44	.46
Residential	25	2-7%	.31	.34	.37	.40	.43	.47	.50	.52
R1, R2		7%+	.35	.38	.41	.45	.48	.52	.55	.58
High Density		0-2%	.35	.38	.41	.45	.48	.52	.55	.58
Residential	45	2-7%	.39	.42	.45	.50	.53	.57	.60	.63
R3,R4,PUD		7%+	.43	.47	.50	.54	.58	.62	.65	.69
Mobile Home		0-2%	.39	.42	.45	.50	.53	.57	.60	.63
Park	60	2-7%	.43	.47	.50	.54	.58	.62	.65	.69
RMH		7%+	.48	.51	.55	.59	.63	.67	.71	.74
Commercial		0-2%	.65	.69	.73	.78	.83	.88	.91	.95
C-2, C-P	95	2-7%	.68	.72	.76	.81	.85	.90	.93	.97
		7%+	.72	.75	.79	.84	.87	.93	.96	.99
Commercial		0-2%	.56	.60	.64	.69	.73	.77	.81	.85
C-1, C-3	80	2-7%	.61	.65	.69	.74	.78	.83	.86	.90
		7%+	.65	.69	.73	.78	.83	.88	.91	.95
Industrial		0-2%	.48	.51	.55	.59	.63	.67	.71	.74
M-1, M-C,	70	2-7%	.52	.56	.60	.64	.68	.72	.76	.79
M-R		7%+	.56	.60	.64	.69	.73	.77	.81	.85
Office		0-2%	.39	.42	.45	.50	.53	.57	.60	.63
0-1, 0-2	60	2-7%	.43	.47	.50	.54	.58	.62	.65	.69
		7%+	.48	.51	.55	.59	.63	.67	.71	.74

*Special Note: All design storms utilizing wet antecedent conditions will use a "C" value not less than that for a 10-year return period.

**I.C. refers to impervious cover

TABLE C-2
RATIONAL METHOD RUNOFF COEFFICIENTS FOR COMPOSITE ANALYSIS
FOR USE IN Q = CiA

Character of Surface		Runoff Coefficients (C) Return Period							
		6 Mo.	1 Yr.	2 Yrs.	5 Yrs.	10 Yrs.	25 Yrs.	50 Yrs.	100 Yrs.
Streets:									
Asphaltic	.70	.74	.78	.81	.85	.89	.93	.96	
Concrete		.76	.78	.82	.87	.90	.94	.97	.99
Drives and Walks (Concrete)	.76	.78	.82	.87	.90	.94	.97	.99	
Roofs		.72	.75	.79	.84	.87	.93	.96	.99
Lawns, Clay Soil-Light (Loams)									
Flat	0-2%	.13	.14	.15	.16	.17	.19	.20	.21
Average	2-7%	.15	.16	.17	.18	.20	.21	.23	.24
Steep	7%+	.23	.24	.25	.26	.27	.29	.32	.34
Lawns, Clay Soil (Heavy)									
Flat	0.2%	.14	.15	.16	.18	.19	.20	.21	.22
Average	2-7%	.17	.18	.20	.21	.23	.24	.26	.27
Steep	7%+	.23	.25	.27	.29	.31	.33	.35	.37
Undeveloped Woodlands and Pastureland									
Clay Soils - Light (Loams)									
Flat	0-2%	.19	.21	.23	.25	.27	.29	.31	.33
Average	2-7%	.26	.28	.31	.34	.37	.40	.43	.46
Steep	7%+	.34	.37	.40	.44	.47	.51	.55	.58
Clay Soil - Heavy									
Flat	0-2%	.23	.25	.27	.29	.31	.33	.35	.37
Average	2-7%	.30	.32	.35	.38	.41	.44	.47	.50
Steed	7%+	.38	.41	.44	.48	.51	.55	.59	.62

TABLE C-3

ROUGHNESS COEFFICIENTS

Conduit Material	Mannings N
Closed Conduits	
Concrete	0.015
Corrugated metal	0.025
Corrugated metal with paved invert	0.019
Plastic pipe	0.013
Vitrified clay pipe	0.015
Open Channels	
Lined channels	
Asphalt	0.015
Brick	0.015
Concrete	0.015
Rubble or riprap	0.030
Vegetal	0.035
Excavated or dredged	
Earth, straight and uniform	0.025
Earth, winding	0.030
Rock	0.040
Unmaintained	0.050-0.140
Natural channels	
Regular section	0.050
Irregular section with pools	0.070

TABLE C-4

RETURN PERIOD

LAND USE	RETURN FREQUENCY
Residential	10 year
Commercial & industrial	25 year
Critical & flood prone areas	100 year

TABLE C-5
JUNCTION OR STRUCTURE
COEFFICIENT OF LOSS

Case No	Reference Figure	Description of Condition	Coefficient Kj
I	C-12	Inlet on Main Line	0.50
II	C-12	Inlet on Main Line with Branch Lateral	0.25
III	C-12	Manhole on Main Line with 45° Branch Lateral	0.50
IV	C-12	Manhole on Main Line with 90° Branch Lateral	0.25
V	C-13	45° Wye Connection or cut-in	0.75
VI	C-13	Inlet or Manhole at Beginning of Line	1.25
VII	C-13	Conduit on Curves for 90°*	
		Curve radius = diameter	0.50
		Curve radius = (2 to 8) diameter	0.40
		Curve radius = (8 to 20) diameter	0.25
VIII	C-13	Bends where radius is equal to diameter	
		90° Bend	0.50
		60° Bend	0.48
		45° Bend	0.35

22-1/2° Bend

0.20

Manhole on line with 60° Lateral 0.35

Manhole on Line with 22-1/2° Lateral

0.75

* Where bends other than 90° are used, the 90° bend coefficient can be used with the following percentage factor applied:
60° Bend - 85%; 45° Bend - 70%; 22-1/2% Bend - 40%

TABLE C-5

HEAD LOSS COEFFICIENTS DUE TO SUDDEN ENLARGEMENTS AND CONTRACTIONS

D2 ** / D1	SUDDEN ENLARGEMENTS Kj	SUDDEN CONTRACTIONS Kj
1.2	0.10	0.08
1.4	0.23	0.18
1.6	0.35	0.25
1.8	0.44	0.33
2.0	0.52	0.36
2.5	0.65	0.40
3.0	0.72	0.42
4.0	0.80	0.44
5.0	0.84	0.45
10.0	0.89	0.46
>10.0	0.91	0.47

$$**\frac{D2}{D1}$$ Ratio of larger to smaller diameter.

TABLE C-6

CULVERT LOSSES

Coefficient k_e to apply to velocity head $\frac{V^2}{2g}$ for determination of head loss at entrance to a structure, such as a culvert or conduit, operating full or partly full with control as the outlet.

$$\text{Entrance head loss } H_e = k_e \frac{V^2}{2g}$$

Type of Sturcture and Design of Entrance	Coefficient k_e
Pipe, Concrete	
Projecting from fill, socket end (groove-end)	0.2
Projecting from fill, sq. cut end	0.5
Headwall or headwall and wingwalls	
Socket end of pipe (grove-end)	0.2
Square-edge	0.5
Rounder (radius = 1/12D)	0.2
Mitered to conform to fill slope	0.7
*End-Section conforming to fill slope	0.5
Pipe, or Pipe-Arch, Corrugated Metal	
Projecting from fill (no headwall)	0.9
Headwall or headwall and wingwalls	
Square-edge	0.5
Mitered to conform to fill slope	0.7
*End-Section conforming to fill slope	0.5
Box, Reinforced Concrete	
Headwall parallel to embankment (no wingwalls)	
Square-edged on 3 edges	0.5
Rounded on 3 edges to radius of 1/12 barrel dimension	0.2
Wingwalls at 30° to 75° to barrel	
Square-edged at crown	0.4
Crown edge rounded to radius of 1/12 barrel dimension	0.2
Wingwalls at 10° to 25° to barrel	
Square-edged at crown	0.5
Wingwalls paralled (extension of sides)	
Square-edged at crown	0.7

*Note: "End Section conforming to fill slope", made of either metal or concrete, are the sections commonly available from manufacturers. From limited hydraulic teste they are equivalent in operation to a headwall in both inlet and outlet control. Some end sections, incorporating a closed taper in their design have a superior hydraulic performance.

TABLE C-7
COMPUTATION OF COMPOSITE ROUGHNESS COEFFICIENT
FOR EXCAVATED AND NATURAL CHANNELS

$$n = (n0 + n1 + n2 + n3 + n4)m$$

	CHANNEL CONDITIONS	VALUE
Material Involved	Earth	0.020
no	Rockcut	0.025
	Fine Gravel	0.024
	Coarse Gravel	0.028
Degree of	Smooth	0.000
Irregularity	Minor	0.005
n1	Moderate	0.010
	Severe	0.020
Variation of Channel	Gradual	0.000
Cross Section	Alternating	
n2	Occasionally	0.005
	Alternating	
	Frequently	0.010-0.015
Relative Effect	Negligible	0.000
Of Obstructions	Minor	0.010-0.015
n3	Appreciable	0.020-0.030
	Severe	0.040-0.060
Vegetation	Low	0.005-0.010
n4	Medium	0.010-0.025
	High	0.025-0.050
	Very High	0.050-0.100
Degree of	Minor	1.000-1.200
Meandering	Appreciable	1.200-1.500
m	Severe	1.500

Roughness Coefficient For Lined Channels

Rubble RipRap - n = 0.022

From: Open Channel Hydraulics
Ven Te Chow, Ph.D

Appendix G

Street Lighting

1.100. Streetlights must be authorized and approved.

Public streetlights may only be installed upon written authorization of the City. Electric utility providers will submit plans to the City Administrator for the location of proposed new streetlights for a determination of compliance with this Sub-Chapter and this Code prior to installation. Any street light installed without prior written authorization of the City will be considered to be a private street light and all associated costs, including but not limited to, installation costs, maintenance, and utility fees, will be the responsibility of the property owner. Public streetlights shall be operated at the expense of the City.

1.200. Street Lights, spacing and design

5. There shall be a street light at each street intersection and at or within one hundred feet (100') of a cul-de-sac and no closer than a distance of four hundred feet (400') nor further apart than a distance of five hundred feet (500'). All distances shall be measured along outer edge of the pavement or curb.

6. The City Administrator may authorize spacing of less than four hundred feet (400') when needed for traffic safety, such as locations of abrupt horizontal or vertical grade changes.

7. The City Administrator may grant additional lighting on the basis of high concentrations of pedestrian traffic such as downtown, schools, or similar areas or where there exist serious traffic hazards or a high incidence of crime based upon the recommendations of the Chief of Police. Nothing in this section should be construed as relieving the property owner or occupier of the duty to provide security lighting.

8. Property owners may petition the City for additional street lights closer than four hundred feet (400') apart by submitting a petition to the City Clerk signed by three (3) property owners whose property contains, adjoins or abuts the proposed location for the streetlight. For this purpose, properties divided by a public road shall be considered to be adjoining if they would be adjoining should the road be vacated. Such a petition must be accompanied by a fee (based upon present costs) equal to the first three (3) years utility fee for residential location or five years in a commercial location for a street light of the proposed type in the proposed location. In addition, the petitioners shall submit a fee equal to the estimated cost of erecting the new light as determined by the utility provider. Upon the submission of a proper petition accompanied by the proper fee, the City Administrator shall authorize the installation of the proposed streetlight as a public streetlight.

1.300. Subdivisions

In addition to any other requirement provided in this Code, any developer of any subdivision shall show on the preliminary plat, the location of all streetlights. The developer shall be required to provide for the erection of such streetlights at the time that any street, which is served by the light is paved. Streetlights shall be designed and placed in accordance with the provisions of this Sub-Chapter. The costs of getting electric service to the light and the erection of the light shall be borne by the developer.

1.400. Removal and Moratorium

The Board of Aldermen may, by majority vote, cause to be removed any streetlight which the Board determines in unnecessary or superfluous. The authorization of the City Administrator shall not be considered to bind the City to erect any light at its own expense. The Board may declare a moratorium on the erection of new lights if financial considerations so warrant.

1.500. Appeal

Decisions of the City Administrator, as provided in this section, may be appealed to the Board of Adjustment. Any appeal not filed within ninety (90) days shall be waived. Decisions of the Board of Adjustment may be appealed to the Board of Aldermen as provided in this Code.

(Source Ord. 2002-027 7-9-02)

LIST OF REFERENCES

1. Urban Storm Water Management, Special Report No. 49, American Public Works Association, 1981.

2. Capacity Charts for the Hydraulic Design of Highway Culverts, Bureau of Public Streets, Hyd. Eng. Circular No. 10, U.S. Government Printing Office, Washington, D.C., 1965.

3. Cassiday, J. J., "Generalized Hydraulics of Grate Inlets", Highway Research Board, Highway Research Record, Vol. 123, p. 36, 1966.

4. Chow, V. T., Open-Channel Hydraulics, McGraw-Hill, Inc., New York, N.Y., 1959.

5. Design Charts for Open Channel Flow, Hydraulic Design Series No. 3, Bureau of Public Streets, U.S. Government Printing Office, Washington, D.C., 1961.

6. Hydraulic Charts for the Selection of Highway Culverts, Bureau of Public Streets, Hyd. Eng. Circular No. 5, U.S. Government Printing Office, Washington, D.C., 1965.

7. Seelye, E. E., Data Book for Civil Engineers - Design, Vol. 1, John Wiley and Sons, Inc., New York, 1945.

8. Taylor, E. M., "Flow Characteristics at Rectangular Open-Channel Junctions", Trans. ASCE, Vol. 109, p. 893, 1944.

9. The Design of Storm Water Inlets, John Hopkins University, Baltimore, Md., 1956.

10. Urban Storm Drainage Criteria Manual, Vol. I, Denver Regional Council of Governments, Wright-McLaughlin Engineers, Denver, Colo., 1969.

11. Design of Urban Highway Drainage, U.S. Department of Transportation, FHWA-TS-79-225; U.S. Department of Transportation, Federal Highway Administration, Washington, D.C. 20590, August 1979.

12. Design Standards for Public Improvements, City of Springfield, Missouri, January 15, 1986.

13. Drainage Criteria Manual, City of Austin, Texas, January 1979.

14. Urban Hydrology for Small Watersheds, Technical Release Number 55, U.S. Department of Conservation, Soil Conservation Service, June 1986.

15. Erosion and Sediment Control Planning and Design Manual, North Carolina Sedimentation Control Commission, September 1988.

16. Erosion and Sediment Control Handbook, City of Richmond, Virginia, Department of Public Works, November 1975.

17. Model Grading and Sediment Control Ordinance, Mid-America Association of Conservation Districts in cooperation with Mid-America Regional Council Soil Conservation Service, U.S.D.A., March 1977.

18. Boone County, Missouri Roadway Regulations Chapter II, Road, Bridge & Right of Way Regulations April 22, 2003